CHAPTER VI

PROTOTYPE SOIL INJECTION SYSTEM

Introduction

The purpose of injection is to place innocuous organic material into the soil during the process of deep tillage for the purpose of preventing recompaction of the soil after tillage. In addition to its role as a soil lightener, as this material decomposes, it is conjectured that it will allow for the passage of air and water to plant roots, which should lead to improved soil structure. Decomposing organic matter may also contribute nutrients to growing plants. It may be noted also that this system could be used to place farm or other benign organic wastes into a soil for the purpose of disposal.

The laboratory experimental system, with its closed and pressurized container, used a non-continuous system of delivery of soil amendment. The objective of this portion of the study is to give initial shape to the plans for a prototype field injection system. It is desired to have a system that is rugged, will deliver most types of organic waste without plugging, and that will have a capacity consistent with field size and loading rates. Some of the ideas that are presented here have been used to guide discussions with manufacturers; equally, these discussions have led to improvements in the plan.

For planning purposes, it is presumed that a maximum of 10 pounds of material is to be injected per foot of travel of a 48-inch ripper tooth. Spacing is assumed to be 48 inches as well so that each pass would affect a 4-ft by 4-ft cross section. The 10 lbs per foot number is based on the experimental injection rates that were achieved in the laboratory, 0.5 to 4.5 lbs per foot for a 12-inch tooth, and also on a calculation of material placed per acre. At ten pounds per foot, each acre would receive 54.5 tons of material. While maximum injection rates are not known, this total would test that bound. Inasmuch as voids -- a volume -- are being filled, the mass, measured as a weight, of material injected will become less with any reduction in specific gravity. Consequently, dry material may be preferable to wet.

Experience with existing subsoilers that are 48 inches deep suggest that track-type tractors similar to a Caterpillar D9 or larger will be needed to draw the injection system. Speeds for these tractors (D9, D10, D11), when in first gear, range from 0 to 2.5 miles per hour with draw-bar pull decreasing inversely from the maximum available to zero at the top speed. Consequently, planning will be based on an average speed of one mile per hour.

Basic Components

There are four principal components within the injection system: (1) hopper/material storage bin, (2) feeder, (3) compressor, (4) injector/subsoiler. Design questions include sizing sufficient for the task, ruggedness and mechanical simplicity, and location on the tractor or on a separate wagon. Some of these questions can be answered in advance and some, such as ruggedness and design simplicity will be deferred until or when a prototype is built.

Power for some of the moving parts of this system will need to come from the tractor. It is presumed that a power take-off will drive an hydraulic pump that in turn will drive feeders and augers. The blower may require a separate motor.

The least-capacity component will determine the maximum output of the system. Whether a feeder or a valve or whatever, all components will need to have the same throughput. Should that productivity be less than desired because of non-availability of larger components then system speed or output or both will have to be reduced.

To avoid immediate recompaction, it is suggested that the material handling system be located between the tractor and the subsoiler. This implies either (1) a train of tractor, wagon to carry the material handling system, and subsoiler or (2) constructing the handling system on the frame of the subsoiler itself. For field flexibility, the total length of the system should be kept as short as possible.

Material Hopper. The design criteria for the hopper are size, delivery system, and material reduction (chopping) system. In addition, consideration is given to hopper location and method of filling it.

The hopper should be as large as possible so as to minimize refilling frequency. However, too large of a hopper will be unwieldy and unable to be filled from mobile haulage units. At ten pounds per foot, one ton will be expended in 200 feet, which is slightly less than one side of a square acre. From the standpoint of reloading, the hopper should not be less than one-ton capacity. If the waste product is loose, already chopped or otherwise unconsolidated, the hopper can be a trough with a chain-conveyor or auger feeder in the bottom. Such hoppers, similar to feed trucks or to ANFO powder trucks, can be ten tons in capacity or more. If the waste product is consolidated, for example round straw bales, then the hopper will need to be shaped so as to receive the product efficiently. An example of this is the round bale feeder, manufactured by Farmhand, which is also round and has a chopper built in.

Feeder. A delivery system will be needed to take material from the bottom of the hopper to the size reducer and then from the reducer to the pressurization system. At maximum capacity (ten pounds per foot and one mile per hour), the system will need to deliver 880 lbs per minute. As mentioned, a mechanical feeder will take material from the bottom of the hopper to the size reducer. If the reducer sits on top of the pressurization chamber, then it in turn will be fed by gravity.

Because of their ready availability and their ability to elevate material, it is suggested that an auger be tried as the mechanical feeder in the first instance. It is conceivable that a chopping blade could be fitted to the end of the auger so as to create a compact and enclosed size reducer.

Pressurization System. Injection will require the waste material to be fed into a pressurized stream of air at the design rate of 880 lbs per minute. In low-capacity systems, solids can be introduced directly into the air stream at the throat of a Bernoulli valve. A restriction in the air stream leaves a negative-pressure (Bernoulli effect) zone at walls of the tube just beyond the restriction. If material is introduced into this negative-pressure zone, it will be picked up by the flowing air stream. Higher capacity systems require some form of air lock such as a rotating star valve to get material into the air stream.

In either case, a blower is needed to provide the air stream. At ten pounds per foot or 880 pounds per minute, approximately 16 cubic feet of material will need to be delivered per minute. If the air stream were ten percent solids by volume, the compressor would need to deliver 160 cfm.

It is presumed that the blower and inlet valve will be directly under the end of the auger and will feed into a short length of flexible reinforced hose that will go directly to the ripper shank. To reduce the advent of hose failure from particle abrasion all curves will be as large a radius as possible. If possible, curves will be built from high-abrasion resistance material. For safety sake, an outer covering should be provided to protect equipment operators from hose failures.

Subsoiler. Existing subsoiling technology can be adapted to the air injection system. It is proposed to use a curved shank with a winged foot of dimensions that have been seen to be effective in other deep tillage trials. The injection tube will go down the back of the shank where it will be protected from abrasion. If possible, it will be divided into two branches with each branch leading to an exit on the trailing edge of each wing. It is hoped that this division of the flow path will encourage more material into the crescent failure zone and less into the slot cut by the shank. The laboratory tests described earlier show clearly that some material can be expected into the crescent zone. However, they also showed that, without special arrangements, most of the injected material will end up in the vertical slot.

To reduce internal friction and the chance of material build-up, all tube joints will be internally flush. It is expected that a tube in the order of two inches diameter will deliver the material to the foot. Each branch within the foot should have half the cross-sectional area of the main tube; this means that exit diameters would be 1.414 in.

In the first instance, tubes will be attached to the back of the ripper shank and foot. Should first trials indicate the possibility of success, designs will be created for incorporating the tube within the shank and the foot.

Contacts with Equipment Manufacturers

The results of the direct contact with equipment manufacturers has been mixed at best. Two general approaches were used in an effort to evaluate the interest of manufacturers in participating in further development of the concepts presented here. The first approach was a general mailing to known manufacturers of deep tillage equipment. The mailing included background on the project and a summary of the project findings. To date only one manufacturer has responded to this iniative and this response expressed no interest in further development.

The second approach has been to endeavor to arrange presentations to manufacturers who were targeted as those that may have greatest interest in the work. A preliminary presentation was made to the local Caterpillar representative in Louisville, Kentucky. This was scheduled as a preface to visiting Caterpillar headquarters in Peoria, Illinois. In fact, the arrangements for such a meeting are still progressing slowly due to Caterpillar's strict requirements surrounding disclosure of intellectual property. A presentation was made to the vice president of engineering and the vice president/international group of Mark Till Corporation in Cedartown, Georgia, the makers of home agricultural equipment. Although this led to an interesting discussion, the representatives of the company stated that they believed the market for such a device to be too small to warrant any development effort on their part. Others such as DMI, Inc. in Peoria, Illinois, and Farmhand, Inc. in Excelsior, Minnesota, have been contacted by telephone. However, no invitations to make presentations were forthcoming.

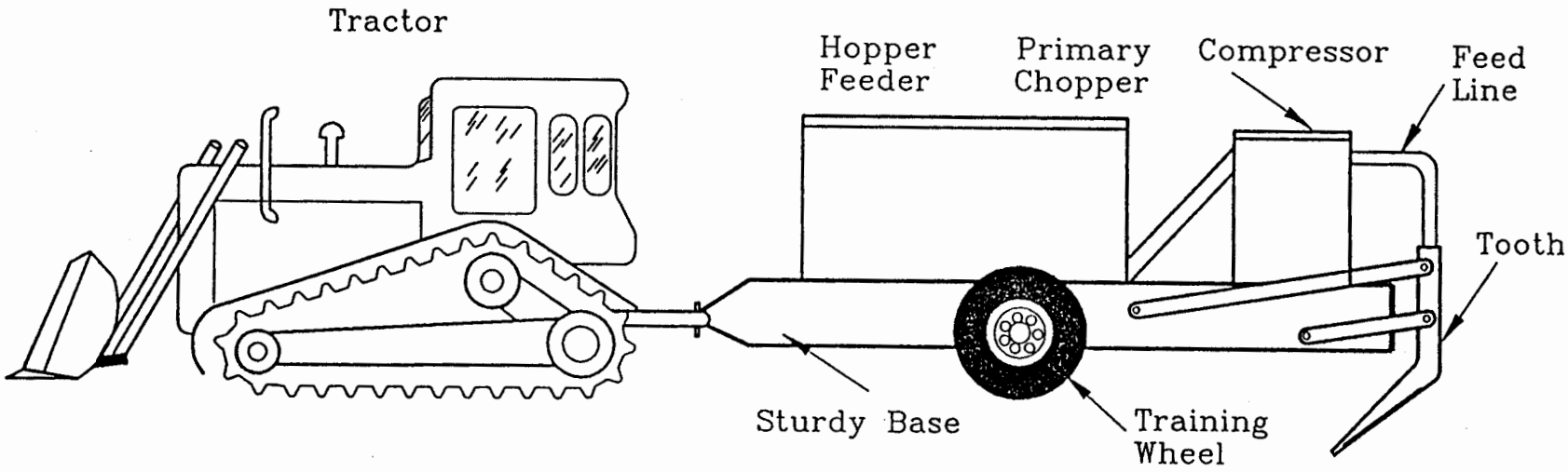

Figure 18a - Conceptual drawing of complete ripping and material injection system

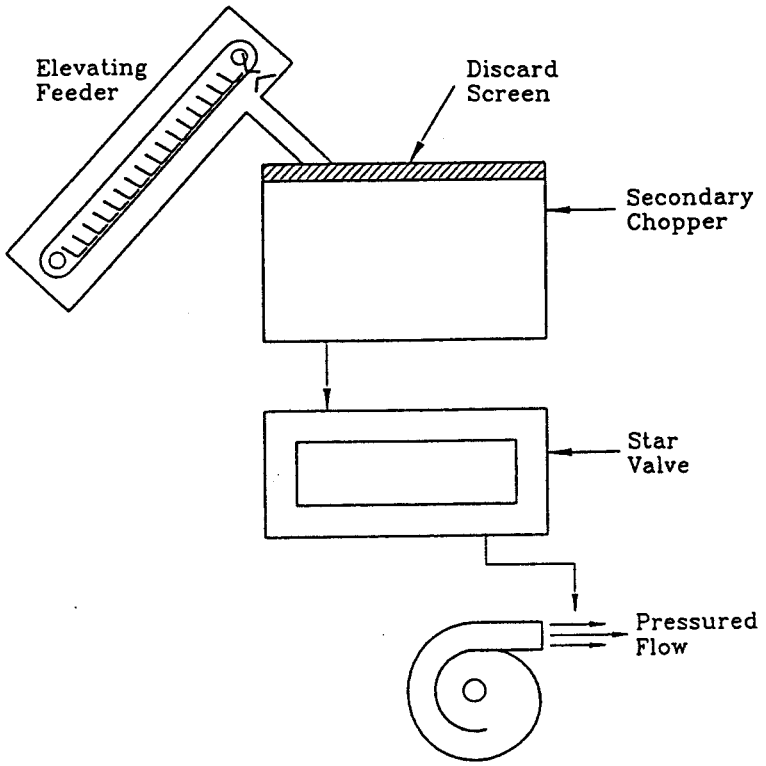

Figure 18b - Schematic diagram of feeder system for pneumatic entrainment of organic material

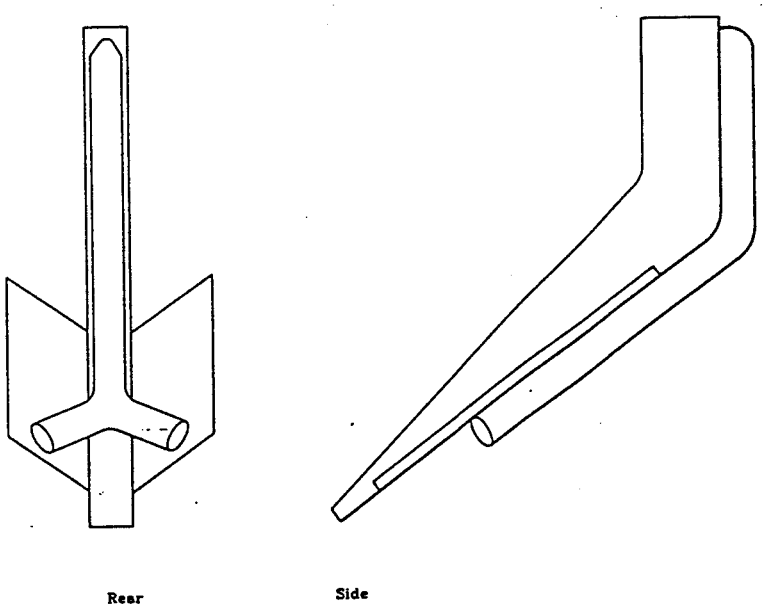

Figure 18c - Detail of ripper shank with air injection nozzle