Design and Construction of a 15-Meter-High, HDPE-Lined Tailing Storage Facility on an Existing Unlined Tailing Storage Facility in the Middle East

ALLEN H. GIPSON, P.E., P.G., HENRI P. VOS, P.E., PMP,
and WILLIAM J. COLE, Knight Piésold and Co., Denver, Colorado
STEVE R. AIKEN, Knight Piésold Limited, North Bay, Ontario

ABSTRACT

A gold mine, located in the Middle East, required a modification to its existing tailing storage facility to (1) reduce seepage losses from the existing unlined facility, (2) capture water being lost to seepage for use in a new heap leach operation, and (3) increase capacity. A unique aspect of this project was the founding of the 15-meter-high, HDPE-lined containment over approximately 40 percent of the existing unlined tailing facility. The tailing deposited in the existing facility served as the foundation for the modification and provided a smooth surface for subsequent geosynthetic liner on both the basin and upstream embankment slopes. The lined tailing basin was designed with an underdrainage system to recover seepage from the tailing and to reduce head on the geosynthetic liner. Other aspects of the modification were to expand the facility using both upstream and downstream embankment construction methods and to provide a sloping decant through the liner and embankment.

Sub-aerial deposition was used as the method of placing the tailing, creating a drained deposit for environmental stewardship, increased capacity, and ease of reclamation. Critical to the design modification was laboratory testing to assess the engineering characteristics of the previously deposited tailing. The modified facility has been in operation since 1995, with subsequent raises being based on the initial modification design. The facility is performing well and meeting the design expectations.

1 PROJECT OVERVIEW

1.1 Site History

The mine began operations in April of 1991. The existing tailing facility was constructed in two stages. Stage 1 involved constructing a series of six dikes connecting topographic ridges to form a rectangular impoundment approximately 1,280 meters east to west by 500 meters north to south. The Stage 2 raise was completed in early 1994 and formed a complete, constructed embankment around the perimeter of the facility. The previous and Phase 1 facilities are shown in Figure 1.

1.2 Objectives

The original design concept envisioned the tailing as being self-sealing, such that the tailing fines would "seal" the basin and virtually eliminate seepage losses. However, water balance analysis indicated that about 60 cubic meters per hour of water was being lost to seepage. The facility was thus modified to reduce seepage losses from the existing unlined facility, capture water lost for use in a new heap leach operation, and increase capacity. This would be achieved by construction of a geosynthetic liner on the surface of the existing tailing facility, changing tailing deposition from a single-point sub-aqueous discharge method to a thin-layer rotational sub-aerial method (drained and air-dried deposition) to increase the in situ density of the tailing and providing an underdrainage system to recover water for use in the heap leach operation.

Construction of a geosynthetic liner on the surface of an existing tailing facility is not a common practice and careful consideration had to be given to the effects of settlement (especially differential settlement) and development of undue strain in the geomembrane liner.

2 LABORATORY TESTING

In conjunction with the project requirements and observations of the performance of the current facility, a laboratory-testing program was conducted to characterize the tailing and other construction materials. Engineering characteristics of the tailing were defined for use in (1) estimating the required facility size to store

the anticipated tailing volume, (2) designing the embankments and foundation, and (3) designing the underdrain pipe system to further consolidate the tailing.

The testing included index testing to characterize the material properties such as Atterberg limits and grain-size analyses. Moisture content and density tests were also conducted on relatively undisturbed tailing samples to assist with material characterization and capacity estimates.

Tailing settling and drying tests were conducted to develop density versus mode of deposition information for the three alternative deposition methods (undrained, drained, and drained and air-dried). Figure 2 summarizes the tailing characterization test results. Generally, the results indicated a dry density of 1,120 kg/m^3 for undrained deposition, 1,280 kg/m^3 for drained deposition, and 1,760 kg/m^3 for drained and air-dried deposition. These densities were achieved at a slurry solids content of approximately 40 percent anticipated during deposition. An in situ tailing dry density (deposited in a drained condition) of 1,290 kg/m^3 was estimated by obtaining the volume of historic tailing, using the pre-construction topography and the existing tailing surface elevation. This was in excellent agreement with the tailing characterization test results, which predict a dry density of 1,280 kg/m^3.

Undrained triaxial shear tests were performed to estimate the shear strengths of the in situ tailing and tailing to be used for construction purposes. The test on the tailing sample remolded to simulate the in situ tailing density resulted in an effective angle of internal friction of 22.9˚ with zero cohesion. The test on the tailing sample remolded to a dry density representing the anticipated future drained condition resulted in an effective angle of internal friction at 35.5˚ with cohesion of 6.7 kPa.

Direct shear tests were performed in a modified 4-inch-square shear box to estimate the interface friction angle between the tailing and the 1.5-mm high-density polyethylene (HDPE) geomembrane for use in stability analyses. This is an important test since the HDPE presents a smooth planer surface on which movements can occur. The stress/strain curves peaked at relatively low strain and then declined. For this reason a conservative residual or post peak strength was used for stability analysis and design purposes. Test results on remolded tailing samples showed angles of friction at 21.5˚ and 24.8˚ and zero cohesion. Test results using residual strength showed an angle of friction of 18˚.

Permeability tests were performed to develop properties of materials for use in the basin underdrain system. The constant head permeability tests conducted on three tailing samples indicated average permeabilities ranging from 7.6 x 10^{-5} to 1.3 x 10^{-5} cm/s.

One-dimensional consolidation tests were performed on tailing samples to estimate settlement of the existing tailing once additional tailing is deposited. From the test data it was concluded that consolidation would be relatively uniform throughout the footprint of the proposed facility but that some differential settlement could occur around the perimeter where tailing thickness varied. These potential issues were addressed in the design.

3 DESIGN

3.1 Design Basis

Current and future project needs were reviewed to establish a philosophy to serve as the basis for designs. The modification included an expansion covering approximately 40 percent of the western portion of the existing tailing facility, using upstream and downstream raises, with the basin and Phase 1 embankments lined with a 1.5-mm HDPE synthetic geomembrane overlain by an underdrain collection system.

The modification was planned to be a four-phased construction raising the western, northern, and southern embankments of the existing facility and construction of a divider dike on the existing tailing to form the eastern embankment. The downstream embankment construction technique was used where the new decant pond was adjacent to the perimeter embankment in the southeast

corner. The upstream construction technique was specified for the remainder of the east and south embankments, if necessary, as well as for the northern and western embankments. A construction schedule every two years for raises was selected as commonly used in similar circumstances.

The Phase 1 raise was a maximum of 5.0 meters and the subsequent three raises were approximately 3.5 meters each. The ultimate facility will have a maximum height of 21 meters, or overall increase of about 15 meters over the level of the existing facility, and will have a crest length of approximately 1,600 meters.

Sequential thin-layer rotational tailing deposition was accomplished through a header pipe with dropbars. Supernatant fluid exited via a sloping decant structure routed to an existing HDPE-lined reclaim pond and was ultimately recycled to the plant for reuse.

3.2 Stability Analyses

Theoretical stability analyses were performed on representative sections of the proposed facility to confirm that the facility, as designed, met commonly accepted minimal factors of safety for slope stability

.

Description	**Factor of Safety**	
	Section 6+60	**Section 10+50**
Downstream Face Circular Failure	1.7	1.7
Downstream Face Block Failure	1.8	1.7
Upstream Face Circular Failure	1.8	1.9

Table 1 – Factors of Safety

Two sections were selected for evaluation: the first represented the maximum anticipated section for upstream method construction founded on natural soils and rock. This is where the existing embankment was also the highest. The second section, also constructed by the upstream method, was selected since it would be founded on existing tailing. Remaining sections of the embankment were considered to be more stable since they were either lower or constructed in the downstream direction of stronger materials. Material properties, including density, angle of internal friction, and cohesion were developed for the materials existing or planned for use in construction. The results of the stability analysis are summarized in Table 1.

3.3 Foundation Preparation

The tailing deposited in the existing facility served as a foundation for the facility modification. Foundation preparation was required for two main purposes: (1) preparation of the surface to support equipment for lining construction and (2) to provide a smooth, compacted surface suitable as bedding for the HDPE liner.

3.4 Embankment

Typical embankment sections are shown in Figures 3 and 4. The southern embankment of the facility modification was designed for construction using downstream construction methods. The eastern embankment was designed for construction as a dike on the existing tailing surface, using upstream raises. Both embankments were designed as homogeneous random fill/waste rock structures using material provided by the Owner and had a 300-mm-thick tailing layer placed on the upstream face as an underliner for the 1.5-mm HDPE liner.

The embankments were designed to have a 5-meter-wide crest and 3H:1V upstream and 2.5H:1V downstream slopes. This geometry was selected to provide embankments with sufficiently high factors of safety while attempting to minimize the amount of construction materials and subsequent cost. The 3H:1V upstream slopes

allowed placement of the underliner and geosynthetic liner. Use of waste rock was planned in both the southern and eastern embankments to provide suitable starter embankments for future construction expansions.

The north and west embankments were designed to be built using upstream construction methods. These two embankments were designed as homogeneous earthfill structures constructed with waste rock or tailing material borrowed from within the modified facility or the unused eastern portion of the existing tailing facility beach.

3.5 Liner and Underdrainage Collection Systems

The liner and underdrainage collection systems were designed to work together to collect underdrainage for reuse. A 1.5-mm-thick HDPE geosynthetic was selected for its resistance to ultra-violet photodegradation (which was a primary consideration in a desert climate), its ability to be thermally seamed (which allows for positive seam quality control procedures), and its puncture resistance, strength, and workability. The HDPE liner was covered with a 300-mm-thick protective layer of tailing imported from the adjoining existing facility.

Potential differential settlement of the existing tailing, and resulting strain on the liner, was accommodated by lining that part of the existing facility that was remote from the existing decant pond, i.e., where the tailing had already undergone some primary consolidation and was able to support construction equipment. Around the perimeter of the facility, where the maximum potential differential settlement was expected, the embankment raises were constructed over previously placed tailing so that the embankment could settle with the liner and alleviate the potential for differential settlements that could impact the geomembrane liner.

The tailing basin was designed with an underdrainage system that overlies the HDPE liner and protective layer. The intent was to provide a collection layer several orders of magnitude more permeable than the tailing to evacuate seepage from the tailing. The underdrainage system also reduces the head on the HDPE liner, thereby decreasing the likelihood of seepage from the facility.

The underdrain includes a herringbone system of 100-mm-diameter, perforated, corrugated polyethylene tubing (CPT) collection pipes placed at approximately 15 meters on center. These collection pipes flow into 150-mm-diameter collection header pipes. The upstream ends of the 150-mm-diameter collection header pipes change from perforated to solid at the toe of the northern and western embankments, then continue up the embankment face, where they are sealed with end caps and will remain exposed. In the event that the pipes should become clogged or flow otherwise restricted, the end caps may be removed and fresh water used to rinse the lines. The downstream ends of the 150-mm-diameter CPT header pipes are connected to solid HDPE pipes, before passing through the existing embankment, and deliver the seepage to an existing lined collection pond.

The herringbone pattern of pipes is covered with a 200-mm-thick layer of basin drain material covered in turn by a 200-mm-thick layer of basin filter material. The basin filter material acts to reduce movement of fine tailing material into the basin drainage material and, hence, underdrainage collection piping. The exposed areas between the underdrainage pipes were filled with a 400-mm-thick layer of fine random fill to present a uniform surface in the bottom of the tailing facility. A typical section through the basin drainage blanket is shown in Figure 5.

3.6 Tailing Distribution System

The tailing from the carbon-in-leach (CIL) plant was designed to be pumped as a slurry to a distribution system running along the northern and western embankments of the modified facility. From the distribution main, the tailing was deposited through dropbars in thin layers, in a controlled rotational sequence, to develop a large exposed tailing beach sloping toward the reclaim pond in the southeast corner of the facility. The tailing distribution system consists of 14 sections with two dropbars in each section, for a total of 28 dropbars. The dropbars have 50-mm-diameter holes cut into the overt at 400 mm on center, along their entire length. This allows deposition of tailing without any maintenance to the dropbars.

As the tailing level rises, the dropbar deposition holes will fill with tailing and deposition will occur through holes higher on the dropbar. The dropbars are buried in the tailing and new dropbars are installed for future phases of construction. It is intended that each of the 14 sections be operated until approximately 100 to 150 mm of tailing have been deposited. The system is then rotated to the next section, allowing the freshly deposited tailing to consolidate, drain, and air dry.

This drained and drying method or sub-aerial technique of tailing deposition produces a denser in situ tailing, providing substantial cost savings. Sub-aerial deposition also provides for enhanced liquid/solid separation during deposition to maximize subsequent air-drying and consolidation of the tailing while maximizing the liquid recovery from runoff and underdrainage collection. This method fulfills the basic design requirement to maximize the recovery of process liquids from within the tailing storage facility, thereby minimizing the volume needed for storage of tailing solids and reducing the cost of storage. By adopting the sub-aerial deposition method, an increase in tailing density of approximately 36 percent is achieved. Had this method not been adopted, the life of the modified facility would have been 4.7 years compared to the 6.4 years achieved.

3.7 Decant System

The decant structure is located at the southeast corner of the facility and connects to the concrete-encased HDPE outlet pipework for transfer of the decanted liquids from the tailing basin to an existing lined pond.

The decant structure consists of a 450-mm-diameter cold-rolled steel section with a 400-mm-wide slot at the top of the section. The slot is fitted with slide guide rail, which allows for insertion of 50-mm x 100-mm wooden stop logs that swell to close the section to advancing tailing and allow control of the pond water level.

4 CONSTRUCTION

4.1 Phase 1 Construction

Phase 1 of the tailing storage facility was completed during 1995 and consisted of raising the western one-third of the existing facility, lining the raised facility with geomembrane, and constructing the underdrain, decant, and tailing distribution piping systems.

4.1.1 Earthworks

Construction activities began in February 1995, with the placement of the working surface for the eastern dike, which crossed the existing containment, onto the existing tailing surface. The material was placed by end-dumping waste material trucked from the mine and was spread using a dozer. Existing tailing was not displaced noticeably during the placement of the eastern dike material, indicating that the tailing provides an adequate foundation for the dike construction. For the northern, southern, and western embankments, a working surface was created in a similar fashion, but the existing tailing offered more support because it was adjacent to the perimeter of the facility. Once the first 1-meter-thick lift of construction material had been placed across the tailing surface, additional 0.6-meter-thick lifts were constructed in a similar manner by end-dumping waste material from the current mine operations or waste material borrowed from mine dumps, spreading with a dozer, and compacting, using systematic routing of construction equipment over the construction surface. Once embankment fill had been placed, an excavator was used to smooth the upstream face to an even 3H:1V slope. Once the upstream embankment face had been shaped, tailing material was hauled from the existing tailing facility and spread on the upstream face of the embankment using a dozer, after which it was compacted to a smooth, uniform layer using a vibratory smooth-drum roller.

The surface of the existing tailing within the Phase 1 construction area was scarified to facilitate drying and increase density so that it would function as subgrade for the geomembrane liner and support construction equipment. Because the tailing surface was soft and very slick, it was initially scarified to remove the layer of crystallized salts and facilitate drying. Once the tailing had air-dried for a few days, it was scarified approximately 150 mm deep or as needed to facilitate drying. Very soft areas were excavated using an excavator or dozer, dried by working it in

the sun, and then replaced. After the tailing had been dried sufficiently, using a farm tractor and disk attachment, it was smoothed using a grader and compacted using a smooth-drum vibratory roller. This method of drying, smoothing, and compacting the tailing surface achieved a smooth, uniform surface to serve as geomembrane liner subgrade. Final shaping and compacting of the tailing surface was done intermittently as equipment was available and to keep just ahead of geomembrane liner deployment so that the tailing surface was not damaged by construction equipment.

Geosynthetic Liner and Underdrainage Collection Systems

Prior to liner placement, the subgrade was accepted and signed off by the liner installer. The liner was deployed using a loader and spreader bar, and seams were made using double-wedge fusion welding machines. Shorter welds, patches, and welds at the bottom of slopes were performed using extrusion welding machines. The protective layer component of the basin drainage system on the geomembrane liner was borrowed from the existing tailing facility, using loaders; hauled to the construction site, using haul trucks; end-dumped; and spread by a rubber-tired loader.

Underdrainage piping installation began by first cutting a 100-mm-deep v-trench into the protective tailing layer using a farm tractor with a specially constructed plow apparatus. Geotextile was then installed lengthwise along these vees, and the underdrainage installation commenced. The underdrainage piping was placed in the v-ditch. Waste rock was crushed on site and used for the basin drain material that was placed over the underdrainage piping using loaders. A farm tractor with a specially constructed attachment was used to strike off the basin drain material above the top of the underdrainage piping. Basin filter material was hauled from the nearby wadi and placed over the basin filter material on the underdrainage pipes using loaders. Finally, the remaining exposed areas in the bottom of the facility were filled with mine waste to complete the underdrainage system.

Tailing Distribution System

Components of the tailing distribution system were obtained from local suppliers. The Owner prefabricated the dropbar offtakes in its workshop on the mine.

Site-Specific Limitations

Construction activities were affected by several factors. These included the remote location of the mine site, workforce experience and language barriers, equipment condition and availability, and climate. The closest major city to the mine site is 750 km away. The long distance delayed delivery of construction materials and equipment parts on several occasions, slowing construction.

The workforce comprised several nationalities, most of whom were of the Muslim faith. To accommodate these workers, work breaks were taken throughout the day for prayer. Although most of the workforce spoke English fairly well, communication was difficult at times due to the variety of languages spoken. These included Arabic, Swedish, Filipino, Indian, and English. English was, however, the one common language. As a result, construction was slowed down periodically to answer design questions or to enquire about construction practices. Occasionally an interpreter was needed. If one was not available, sketches were used to visually communicate the issue at hand.

The technical specifications for the tailing facility modification adhered to U.S. standards. On occasion this created problems with the construction supervisors and workers who weren't accustomed to such exacting standards. Several times during liner deployment and seaming, the owner of the liner installation company was on site pleading his case to lower the destructive testing requirements, saying it was unreasonable and that they never had to do such a large amount of testing in the past. Due to several destructive test failures at the beginning of geosynthetic liner construction, the frequency was never altered.

The overall condition of the contractors' construction equipment on site was marginal at best. Machinery continually broke down and spare parts' availability was an issue. A lack of working equipment resulted in slow production of the tailing component of the basin drainage system, forcing the Owner to relieve the earthworks construction contractor of further involvement with

the Phase 1 project. Construction was slowed down until another earthworks contractor mobilized to the site and was familiar with the project.

Without question, the most challenging aspect to deal with during construction was the temperature fluctuations during the course of a 24-hour period. Temperatures rose to over 40 °C (104 °F) during the day and cooled off to 25 °C (77 °F). This made it exceedingly difficult for liner deployment and seaming. The HDPE liner used to line the facility is very susceptible to temperature fluctuations, and deployment and seaming had to be carefully planned and timed. Deployment and seaming was completed during the early morning hours before the liner began to wrinkle and fold due to the intense heat and resulting expansion of the liner. Afternoons were limited to QA/QC testing and liner repair. "Trampolining" of the liner on the slopes and especially in the corners was common due to not leaving enough slack in the liner to account for contraction at night. This resulted in having to cut the liner to relieve the tension and then reinstall and seam the liner. In addition, because the liner had numerous wrinkles and folds during the heat of the day, it was apparent that the overlying protective layer had to be placed at night when the liner surface was smooth. This required a second shift of workers to place the protective layer at night. Visibility was poor, making it difficult to place the material on the liner and spread to the specified thickness. The HDPE liner was torn several times by the loader, resulting in having to stake the area off, remove the protective layer over the tear and repair the liner. The heat during the day also required the installation of the HDPE tailing distribution system piping during the night.

The overbearing daytime temperatures also took a toll on the equipment and workers, thus resulting in numerous breaks due to fatigue and/or machinery breakdowns. Compounding the heat was working on the black surface of the HDPE liner, which, during the heat of the day, had temperatures exceeding 50 °C (122 °F). Not to mention the high winds and resultant sandstorms, which exacerbated the situation.

Careful planning and scheduling were required to complete the placement of the infill material between the underdrainage pipes so that equipment did not damage the pipes, and trucks did not have excessively long, circuitous routes to maneuver between the herringbone layout. In some areas, continuous traffic over the protective layer caused heaving of the underlying tailing and alternative routes had to be created.

5 CONCLUSION

The design concepts and parameters developed to modify an existing unlined tailing storage facility by constructing an HDPE-lined tailing storage facility over previously placed tailing proved in practice to be excellent. Seepage was recovered for use in the heap leach operation as anticipated in the design. The facility provides the capacity required by the Owner as a result of the higher densities achieved by the application of the sub-aerial deposition technique and underdrainage system. Subsequent raises were undertaken at minimal cost, and reclamation of the facility will prove to be simple and economical.

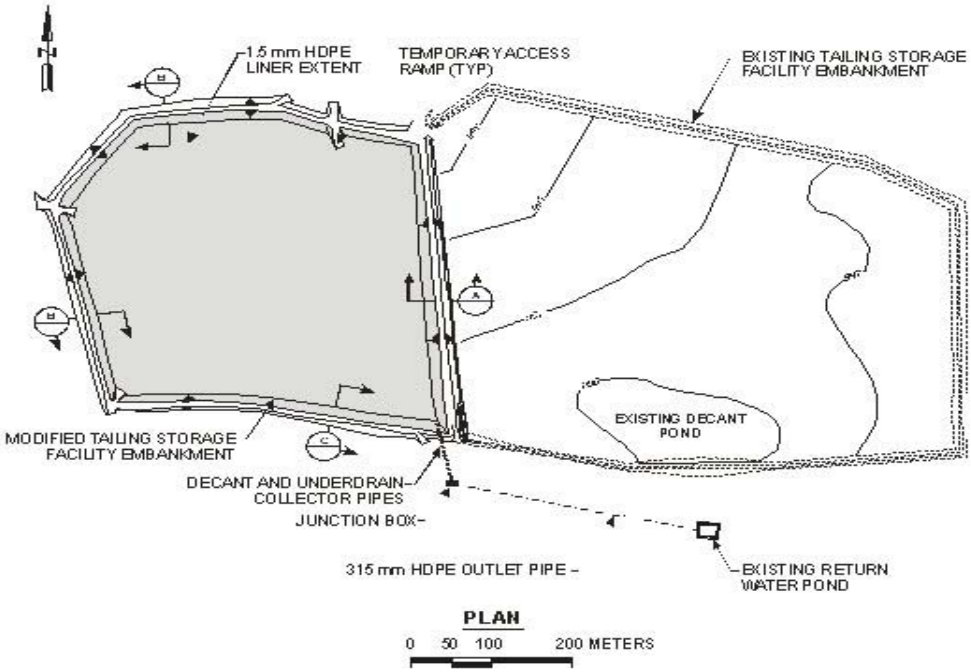

Figure 1 – Phase 1 Facilities

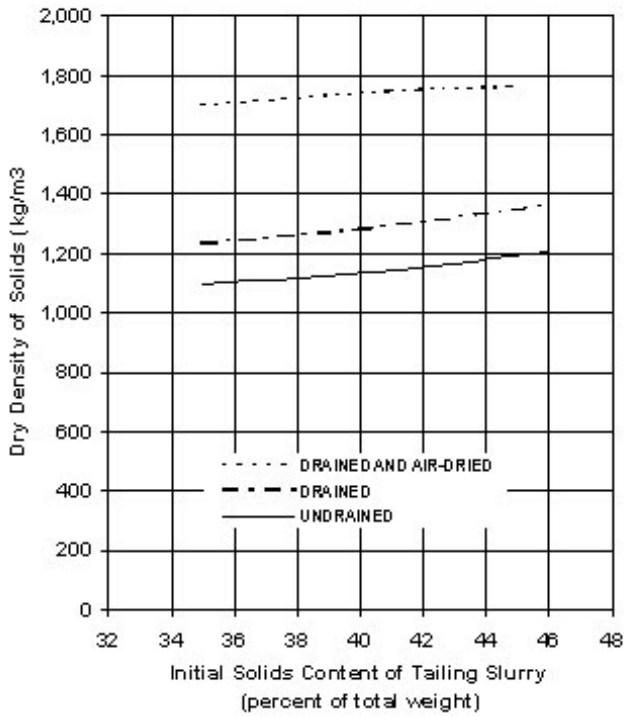

Figure 2 – Relationship Between Dry Density and Initial Solids Content

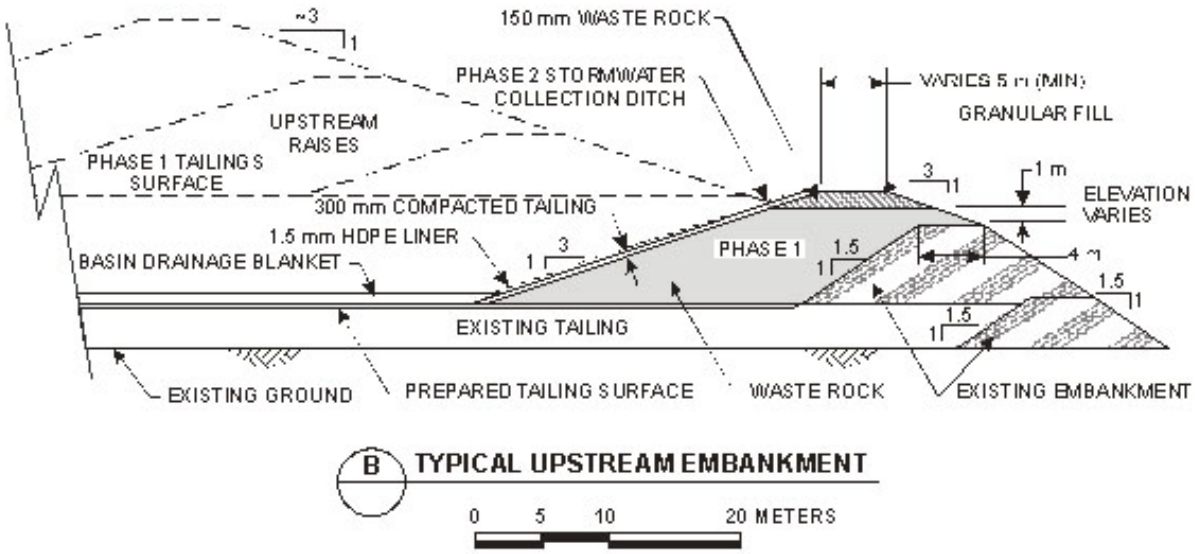

Figure 3 – Embankment Section, Upstream Construction

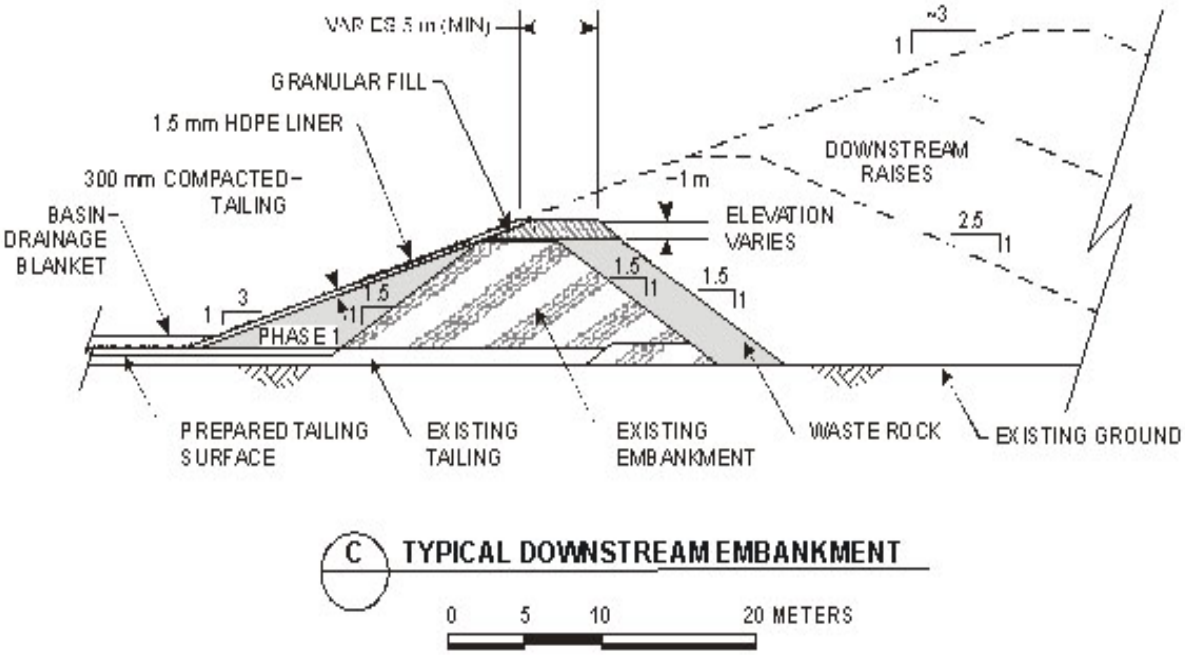

Figure 4 – Embankment Section, Downstream Construction

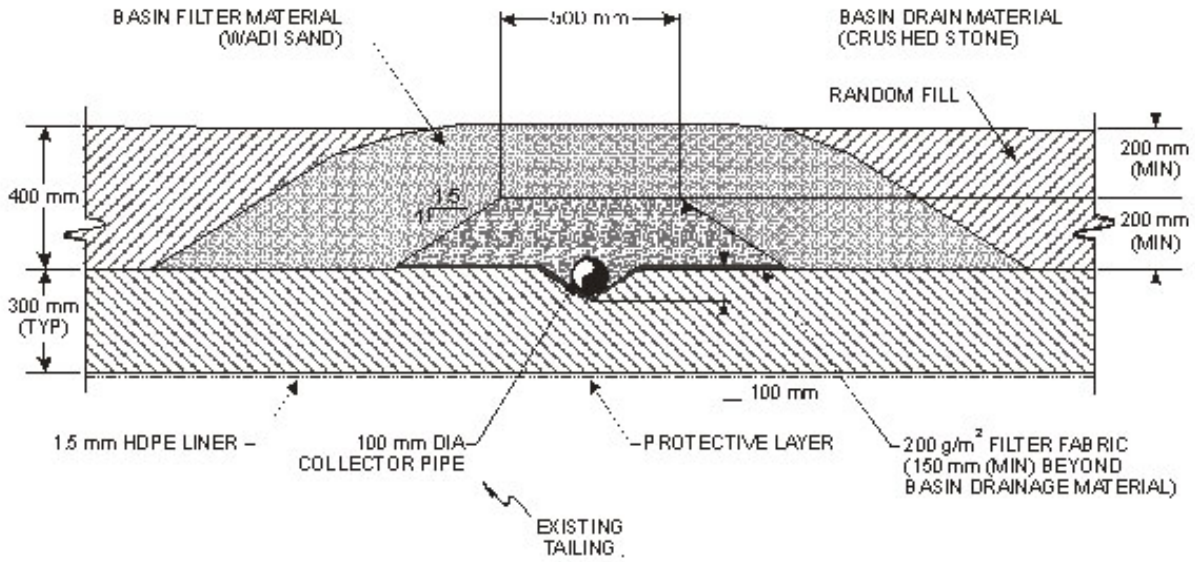

Figure 5 – Typical Section Through Drainage Blanket