WILDLIFE

Section Editor: Bonnie C. Postovit

Handbook of Western Reclamation Techniques

Table of Contents

SECTION 7: WILDLIFE 1
A. Introduction 1
B. Fencing Practices and Wildlife 1
Applicability 1
Special Considerations 1
Techniques 2
a. Selective Exclusion 2
(1) Excluding Livestock and Pronghorn 2
(2) Excluding Livestock and All Big Game 2
(3) Excluding Livestock Only 2
b. Avoiding Wildlife Hazards 2
(1) Create Passages 2
(2) Eliminate Sharp Corners 3
B. Reducing Powerline Hazards to Wildlife 3
Applicability 3
Special Considerations 3
Techniques 3
a. Design Strategies 3
b. Modification Strategies 3
(1) Separation of Charged Phases 4
(3) Perch Management 4
(4) Nest Management 5
C. Traffic and Roadways 5
Applicability 5
Special Considerations 5
Techniques 5
a. Reducing Conflict Between Traffic and Wildlife 5
(1) Fencing 5
(2) Underpasses 5
(3) Employee Education 5
(4) Work Schedules 6
D. Providing Interim Wildlife Habitat 6
Applicability 6
Special Considerations 6
Techniques 6
a. Tree and Shrub Substitutes 6
(1) Brush Piles 6
(2) Snags 6
(3) Nesting Structures 7
b. Temporary Water Source Enhancement 7
(1) Vegetation 7
(2) Islands 8
(3) Peninsulas 8

(4) Shallows 9
c. Highwall Modifications 9
(1) Travelways 9
(2) Potholes 9
(3) Talus 9
E. Raptor Nest Relocation 10
Applicability 10
Special Considerations 10
Techniques 10
F. Animal Control 14
Applicability 14
Special Considerations 14
Techniques 14
a. Physical Barriers 14
(1) Fences 14
(2) Cages 14
(3) Tree Wrap 15
(4) Netting 15
(5) Flashing and Screening 16
(6) Perch-proofing 16
b. Scare Devices 16
(1) Visual Scare Devices 16
(2) Audio Scare Devices 16
c. Repellent 17
d. Animal Removal 17
(1) Trapping 17
(2) Poison 18
(3) Cats 18
e. Raptor Nesting Control 19
(1) Barriers 19
(2) Removal of Nesting Substrate 19
(3) Audio Scare Devices 19
(4) Human Disturbance 20
G. References 20

SECTION 7: WILDLIFE

A. INTRODUCTION

Section editor: Bonnie C. Postovit *Subsection author: Bonnie C. Postovit*

Like soil, water, and vegetation, wildlife is a resource that must be protected from undue impact during mining and other surface disturbing activities. Soil and water are the basic resources that support vegetation; water and vegetation maintain wildlife. Wildlife is an indicator of the health of the entire resource system. Robust, diverse wildlife populations are a sign that the supporting resources are functioning together properly.

Although the response of wildlife to mining ultimately depends upon the management of soil, water, and vegetation, there are specialized mitigation measures that apply directly to wildlife, and these measures are presented in this section. Subsections on fencing, powerlines, and roadways examine Techniques to modify the impact of those aspects of mine development. Another subsection details ways to provide habitat for wildlife during the mining or other surface-disturbing process. A separate subsection deals with raptor nest relocation; a mitigation measure developed in response to Federal laws that protect raptors and their nests, eggs, and young. The final subsection, on animal control, describes management strategies to use when wildlife interfere with mining, reclamation, or other surface operations.

For many people, wildlife *defines* the West. The treatment of this high-profile resource during mining, reclamation, and other surface operations will, to a great extent, color public attitude toward energy, mineral extraction, and other surface disturbing activities.

B. FENCING PRACTICES AND WILDLIFE

Section editor: Bonnie C. Postovit

Applicability

Fencing is necessary to prevent animals from entering hazardous areas, and may be needed to temporarily protect reclaimed areas.

Special Considerations

Fences should be constructed and located to present the least possible hazard to free-ranging wildlife. Pronghorn are not willing or skilled jumpers, and where possible prefer to go under fences rather than over. Large-scale mortalities can occur when herd movements are blocked by fences during severe weather, causing pile-ups and starvation. Smaller-scale mortality occurs when pronghorn become entangled while jumping over fences. Deer jump fences readily; however even they sometimes entangle their hind legs in the top two strands of a barbed wire fence. Fawns, especially, are prone to entanglement.

Techniques

a. Selective Exclusion

The following text briefly describes fencing considerations and general design dimensions for excluding various animals. A thorough discussion of fencing and fence design may be found in Wyoming Department of Environmental Quality - Land Quality Division (WDEQ-LQD) Guideline 10 (WDEQ-LQD, 1979).

(1) Excluding Livestock and Pronghorn

Livestock and pronghorn access can be controlled with a four-foot high "sheep-tight" fence. Such a fence is usually constructed of woven wire topped by two strands of barbed wire. Because blocking pronghorn herd movements can cause significant mortality, this type of fencing should be limited. Such a fence may be necessary in the immediate vicinity of pits and operations areas to keep livestock and pronghorn from the hazards of highwalls and heavy traffic. It is not generally necessary to exclude deer from such areas, as they typically negotiate such hazards readily.

(2) Excluding Livestock and All Big Game

Prohibiting livestock, deer, elk, and pronghorn access can be accomplished with a seven to eight foot woven wire fence. Alternatively, a six foot woven wire fence can be topped with two strands of barbed wire. Such a fence may be needed if all grazing is to be excluded from an area. Where deer (or elk) are present, such a fence may be necessary to keep game animals from entering hazardous areas or to temporarily protect vegetation.

(3) Excluding Livestock Only

Prohibiting livestock, but not wildlife, access can be accomplished with a three- or four-strand wire fence. Such a fence can be used to control livestock within an area, but allow relatively free range by wildlife. The following dimensions are recommended by the Bureau of Land Management, and may be found in the publication "Proceedings: Regional Fencing Workshop" (BLM, 1974). To exclude cattle, a 44-inch, three-strand wire fence is sufficient. For excluding sheep, a 38-inch, four-strand fence can be used. If both are present, a 44-inch, four-strand fence is necessary.

On any such fences, a smooth bottom wire allows pronghorn to go under easily. On cattle-tight fences, this wire can be placed 16 inches above the ground. For sheep-tight fences the wire should be only 10 inches high.

b. Avoiding Wildlife Hazards

Avoiding hazards to wildlife is important in fence location and design. Where large areas must be fenced, it is necessary to plan for safe and easy animal movement.

(1) Create Passages

Create passages where major herd movements may be blocked. Deer are known to use underpasses and "deer gates", but pronghorn will not. Antelope passes can be created by installing cattle-guard-type structures. Rather than

relying on specialized structures, it is better to use a fence design that permits wildlife movement under or over.

(2) Eliminate Sharp Corners

Eliminate 90° corners where animals are found to "pile up" during mass movement. Construct shallower angles where a fence must turn or narrow down.

B. Reducing Powerline Hazards to Wildlife

Section editor: Bonnie C. Postovit *Subsection author: Howard R. Postovit*

Applicability

Powerlines present an electrocution hazard to raptors (birds of prey) and other large birds, such as herons. Raptors and other birds are protected by Federal law. Proper design of powerlines can minimize or eliminate electrocution and other hazards.

Special Considerations

Power poles provide attractive perch, nest, and roost sites, especially in relatively flat and treeless areas. This is a positive impact of powerline construction. However, the size of some birds makes it possible for them to simultaneously contact two charged objects (phases or conductors) or one charged object and a ground wire. Most problems occur on distribution lines, particularly at junction poles and transformers. New lines can be constructed to raptor-safe specifications, and older lines can be modified if an electrocution problem arises.

Power poles greatly increase perching habitat, which can increase predation on Sage-grouse and other gallinaceous birds, as well as on lagomorphs and prairie dogs. When possible, powerlines should be buried or equipped with perching deterrents to eliminate excess perching habitat.

Techniques

a. Design Strategies

High voltage transmission line towers or H-frames seldom pose an electrocution hazard because of the distance between the phases. However, H-frames can be detrimental to raptor populations because these structures commonly attract nesting raptors, but offer no substantial support for a nest. Nests built on H-frames are regularly destroyed by wind during the breeding season, resulting in loss of eggs or young.

Raptor-safe designs for power poles and lines have been developed through cooperative research between power companies, government agencies, conservation organizations, and private consultants. The resulting designs all but eliminate the possibility of electrocution. The most complete manual on this work is: *"Suggested practices for raptor protection on power lines--state of the art in 1981"* (R. R. Olendorff et al., 1981). When contracting powerline construction for an operation, it is important to specify that lines be of a "raptor-safe" design. Power companies and electrical contractors should be familiar with the Olendorff et al. publication.

b. Modification Strategies

Modification strategies can take one of four forms: separation of phases, insulation, perch management, and nest management. It is generally not necessary to modify all poles of an

existing line. Any poles where electrocution has occurred should be modified to prevent further losses. Other non-safe poles (particularly junction or transformer poles) showing signs of regular raptor use (whitewash or pellets on the ground below) could also be modified to eliminate the potential for electrocution. Poles or H-frames where repeated unsuccessful nesting attempts are documented can be modified to prevent or enhance nesting.

(1) Separation of Charged Phases

A 152-centimeter (60-inch) separation of charged phases is considered necessary to prevent electrocution of birds the size of golden eagles. Separation on a 3-phase line can be accomplished by raising the center line, or lowering the cross-arm that bears the outer two lines. When proximity of a charged part and a ground wire is the problem, a gap can be cut in the ground wire (Olendorff et al., 1981.).

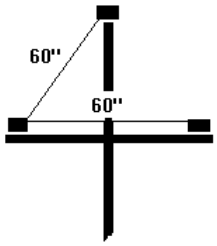

SEPARATION
OF CHARGED PHASE

INSULATION

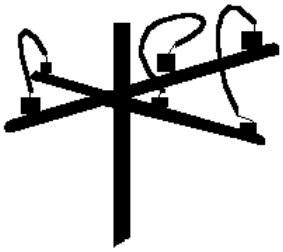

JUMPERS COVERED WITH SQUIRREL WRAP

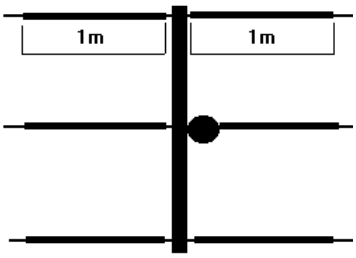

SQUIRREL WRAP ON LINE POLE

(2) Insulation

While reconfiguring existing poles can be very expensive, insulating is relatively cheap and simple. Covering jumper wires with rubber "squirrel wrap" has been effective in reducing electrocutions at junction poles. The same strategy can be applied to wires on transformers. On problem line poles, insulation can be extended one meter from the pole along all phases.

(3) Perch Management

If neither separation of phases nor insulation is feasible, a pole can be modified to prevent birds from perching or nesting between wires on cross-arms. Alternatively, new perches can be attached to the pole to allow continued use by raptors while eliminating unsafe perches.

PERCH MANAGEMENT

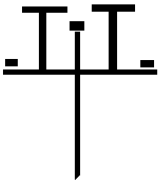

RAISED "T" PERCHES

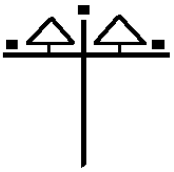

TRIANGLE PERCH GUARDS

(4) Nest Management

Poles can be modified to prevent nest construction or to increase nest stability. Techniques used to deter perching can be used to preclude nesting. Artificial nest structures such as nest baskets or platforms can also be attached to a pole or H-frame to provide a stable support for a nest.

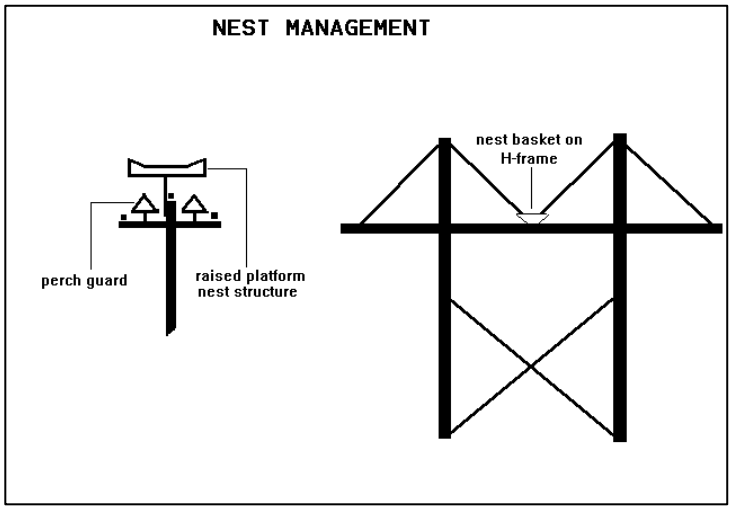

C. Traffic and Roadways

Section editor: Bonnie C. Postovit *Subsection author: John D. Berry*

Applicability

Traffic and roadways can seriously impact wildlife movement or distribution.

Special Considerations

Access and haul roads present formidable obstacles to movement or distribution of some wildlife species. Road traffic can affect wildlife directly, by collision, or indirectly, by disturbance.

Techniques

a. Reducing Conflict Between Traffic and Wildlife

Certain measures can be implemented by companies to reduce potential conflicts. These measures may include fencing, underpass installation, employee education, and altering work schedules.

(1) Fencing

Fences can be used to direct wildlife across or away from roads. Fence designs can target certain species (see the subsection entitled "Fencing Practices and Wildlife").

(2) Underpasses

Underpasses can be built in areas of critical migration routes for certain big game species. These areas are generally documented during the premining inventory, so underpasses can be incorporated in the initial construction phase. Fencing is needed to direct animals to underpasses. This option is obviously very expensive and requires considerable upkeep to maintain. Pronghorn antelope do not appear to use underpasses.

(3) Employee Education

Employee education and notification can be implemented to reduce wildlife/roadway conflicts. Safety lectures can include information on wildlife

behavior to teach employees what to expect, and how to avoid collision hazards. Periodic notices can be posted to remind employees of seasonal migrations or activities which would increase the occurrence of animals around roadways.

(4) Work Schedules

Work schedules can be altered to reduce traffic disturbance in sensitive wildlife areas. Strutting grounds, fawning areas, and raptor nest locations are areas which are seasonally sensitive. Road closures during sensitive periods or during certain times of day can reduce conflicts.

D. Providing Interim Wildlife Habitat

Section editor: Bonnie C. Postovit *Subsection author: Bonnie C. Postovit*

Applicability

Temporary habitat enhancements can help alleviate the impacts of mining on wildlife.

Special Considerations

Some reclamation features, such as shrub stands and trees, take time to mature and achieve value to wildlife. Interim substitutes can be used to serve the functions intended for the permanent features. Some mine features, such as sedimentation reservoirs and highwalls, are of potentially great value to wildlife. Properly modified, such features can serve as important interim habitat during their existence.

Techniques

a. Tree and Shrub Substitutes

Interim substitutes for shrubs and trees include brush piles, snags, and artificial nesting structures.

(1) Brush Piles

Brush piles provide escape cover and den sites for small mammals, lagomorphs, and predators. Trees or shrubs salvaged from stripping operations can be piled on newly-reclaimed areas. These brush islands will persist for several years, until vegetation is mature enough to provide cover for wildlife. The base of a brush pile can be formed of logs or larger branches piled at angles to create cavities. Smaller branches and brushy material can be piled on top to increase protective cover. Brush piles should be at least 10 to 15 feet in diameter and 4 to 5 feet high to furnish cover for a variety of small and medium-sized animals for several years.

(2) Snags

Snags are valuable habitat features for perching and nesting. Snags can be created by erecting a felled tree. The best trees for this purpose have numerous sturdy branches and long, single, straight trunks. The base of the tree must be sunk several feet into the ground for stability. Snags are put in place using normal power pole setting equipment and procedures. They provide instant tree-like habitat, and can last several years. Treating the lower part of the trunk with creosote may help prolong the life of the snag.

(3) Nesting Structures

Artificial nest structures, such as platforms and nest boxes, are commonly used to provide habitat for raptors and other birds. Designs vary depending upon the target species. For example, ferruginous hawks will use low or high platforms, but appear to dislike wind guards or shading that obstructs the view from the nest. Golden eagles and red-tailed hawks prefer higher platforms. Shading can be provided by installing plywood "wings" on two sides.

Platforms can serve until trees are established. In areas devoid of trees, they can be a valuable form of permanent habitat enhancement. A well-constructed platform will last for many years.

The same cannot be said of nest boxes. Need for maintenance is a commonly-overlooked aspect of nest boxes. Bluebirds, for example, will not reuse a box unless old nesting material is cleaned out annually. Kestrel nest boxes likewise need periodic cleaning. There is dubious value in erecting numerous nest boxes without a provision to properly maintain them. An example of a nesting box design is given on the following page.

b. Temporary Water Source Enhancement

Reservoir modifications that can enhance temporary water sources include vegetation plantings, islands, peninsulas, shallow shoreline areas, and escapeways.

(1) Vegetation

Vegetation plantings can speed natural wetland colonization processes. It can take several years or longer for cover and food species such as sedges, rushes, and cattails to colonize a new water source; especially if the source is relatively isolated from natural areas. A temporary reservoir might come to the end of its existence just as it was achieving high wildlife value. Transplanting clumps of

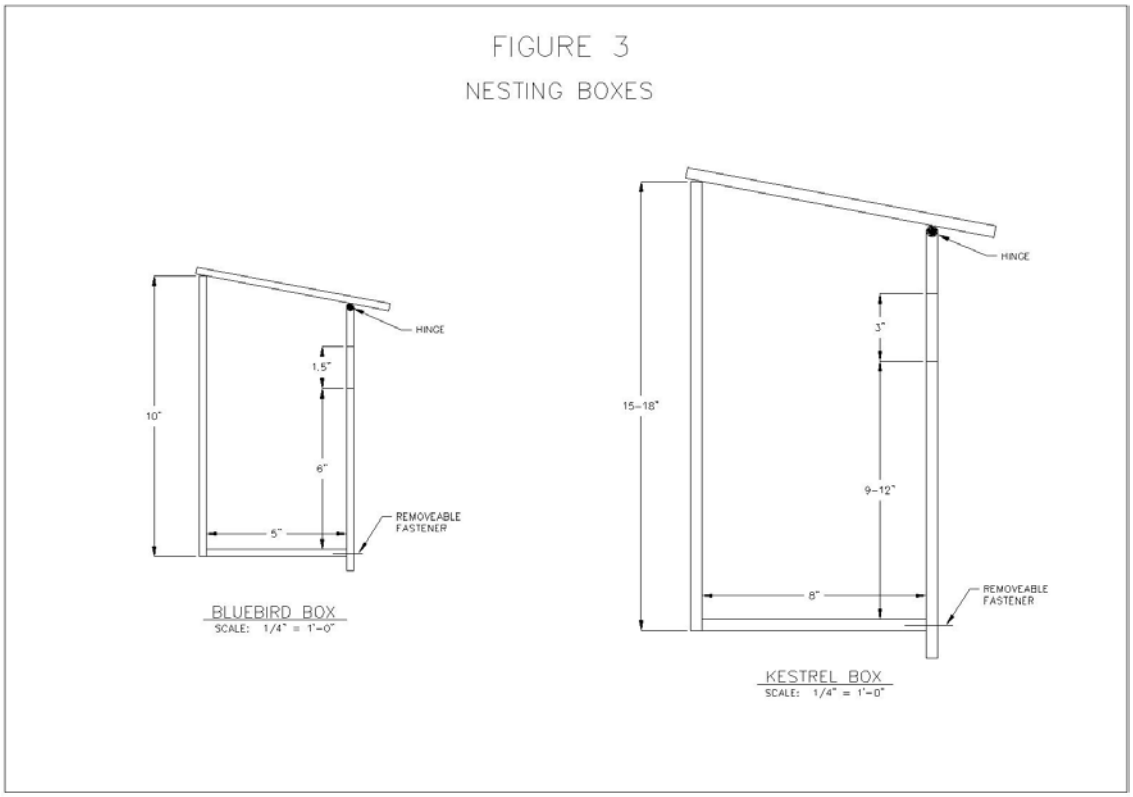

vegetation along the shoreline of a reservoir will quickly boost the value of the reservoir to waterfowl and other wetland users.

Transplanting can be accomplished very simply with hand shovels and five-gallon buckets. The goal is not to plant a pond's entire shoreline, but to establish numerous clumps of swiftly-spreading plants. Transplanting is best accomplished in spring or early summer. When digging plants, it is vital to remove good-sized portions of roots or tubers intact. When replanting, the roots should be well-covered with soil. Plants should be set where water (or at least saturated soil) will be present during all seasons.

(2) Islands

Islands provide secure resting and nesting places for waterfowl. Islands can be created at any time by placing material (dirt, rocks, large round bales) in a channel or reservoir. The low water line should always leave the island surrounded by water, and the high water line should not inundate the entire island. Islands are improved if they can be vegetated to provide nesting cover.

(3) Peninsulas

Peninsulas increase the amount of shoreline, which increases the value of a reservoir for wildlife habitat. Peninsulas generally need to be incorporated during the reservoir design and construction process. The more shoreline that can be incorporated into pond design, the greater its eventual wildlife value.

(4) Shallows

Shallow shoreline areas are absent from many constructed reservoirs. Reservoirs with uniformly steep sides are of little value to most wildlife. Shallow areas are vital to shorebirds as well as resting waterfowl. A gentle slope also makes it easier for all animals to access the water source for drinking and shoreline foraging. While the economics of reservoir size to volume generally dictate a small, deep design, one side (or a portion of one side) could be altered to provide a shallow stretch of shoreline for wildlife use.

If shallow areas are impossible to construct, escapeways are needed to prevent wildlife loss in plastic-lined or very steep-sided reservoirs. Creating an escapeway can be as simple as tacking down a length of burlap, or other rough fabric, from the rim of the reservoir to below the low water line. Escape ramps or ladders can be made of wooden planks, metal grating, or other material that gives a wet animal traction.

c. Highwall Modifications

Highwall modifications could be considered where a highwall will be inactive for a period of years. Features that enhance the safety and value of highwalls for wildlife include travelways, talus piles, and potholes. These same modifications can also be incorporated permanently into any highwall segment that is to be developed as a bluff in the postmining landscape.

(1) Travelways

Travelways allow animals to move from the top to the bottom of a highwall. Inactive pit areas often provide attractive shelter and shade for animals. A long, unbroken stretch of highwall can impede wildlife movement and hinder these uses. Leaving or creating ramps of material against a highwall at intervals of a few hundred meters allows animals easier passage. Sometimes the natural sloughing of a highwall helps form such travelways for wildlife. If it is possible (from a safety standpoint) to allow or augment such sloughing, this can be desirable for wildlife.

(2) Potholes

Potholes in cliffs are used as shelter and nest sites by species ranging from packrats to owls. If a highwall has few or no natural cavities, and the material has enough stability, potholes can be excavated along the face at different heights. These cavities need not be large; most species that would use such holes would need less than one meter in width, height, and depth.

(3) Talus

Talus, or piles of loose rock, at a highwall base can break up the uniformity and monotony of a long, flat, highwall face that otherwise offers little shelter. Talus provides hiding and denning places for small and medium-sized mammals. These piles can help form the travelways mentioned above.

E. Raptor Nest Relocation

Section editor: Bonnie C. Postovit *Subsection author: Howard R. Postovit*

Applicability

Raptors (birds of prey) and their nests are protected from destruction by Federal law. If nests can be successfully relocated, resource recovery will not be impeded.

Raptor nest relocation is more than simply removal of an obstruction to mining; it is management of a valuable wildlife resource. Raptor nests can be relocated to maintain an existing pair during mining, or encourage a new pair to establish in a particular area.

Special Considerations

Because nests are protected by law, State and Federal special purpose permits must be secured prior to relocation. Knowledge of raptor biology is necessary to determine a nest's activity status and select appropriate relocation sites. Decisions regarding relocations should be made with the advice of a wildlife biologist experienced with raptors.

Techniques

Background information is needed to develop a mitigation plan and implement successful nest relocations. An initial inventory is needed to determine what species nest in an area, and locate all nests. Annual monitoring is then needed to check known nests for activity, and search for any new nests.

Once raptor nest locations and histories are known, a mitigation plan can be developed to address nest sites that are in the path of mining. Wherever possible, a nest should be scheduled for relocation during the non-breeding season at least one year prior to disturbance. Advance planning helps avoid the possibility of having to alter or suspend operations to avoid an active nest.

Nest relocations should have specific goals. For example: in-kind replacement of a nest site; maintenance of a specific raptor pair; or enhancement of nesting habitat in an unoccupied area. Decisions regarding location, platform (or substrate) type, and timing should be made on a case-by-case basis by an experienced biologist. If a relocation is intended to maintain an existing pair, the nest must be relocated within the pair's territory. If the intent of relocation is preservation or enhancement of nesting habitat, the nest can be moved to a location where interference from existing pairs is unlikely. **Relocation plans must be submitted to the U. S. Fish and Wildlife Service and the State wildlife agency well in advance to obtain the necessary permits.**

Relocation of eggs or young is a technique generally undertaken only in emergencies. There may be instances where an active nest must be moved, for example, when raptors nest on an unstable highwall, or on a temporarily inactive piece of equipment. Unlike nest relocation during the non-breeding season, this method involves potential and immediate risk to the birds. Emergency relocations of active nests with eggs or young must be supervised and conducted by a biologist experienced in raptor behavior and care. Federal and State permits are necessary for "hands-on" work with raptors.

Platform design for the relocation is given on the following pages.

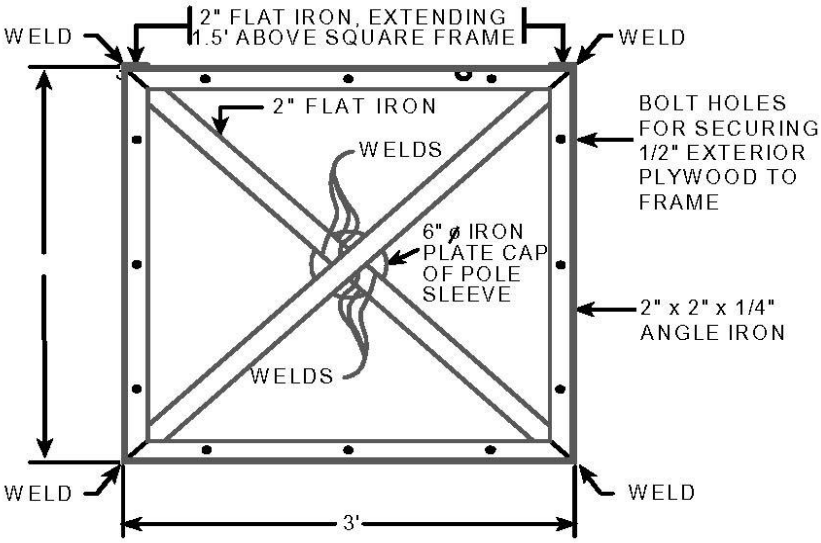

TOP VIEW PLATFORM FRAME

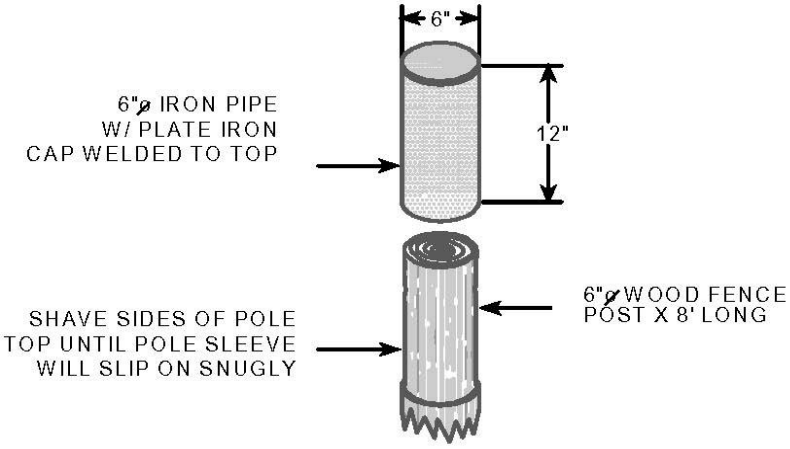

POLE SLEEVE DETAIL

FERRUGINOUS HAWK PLATFORM

DESIGN BY: POSTOVIT, 1984

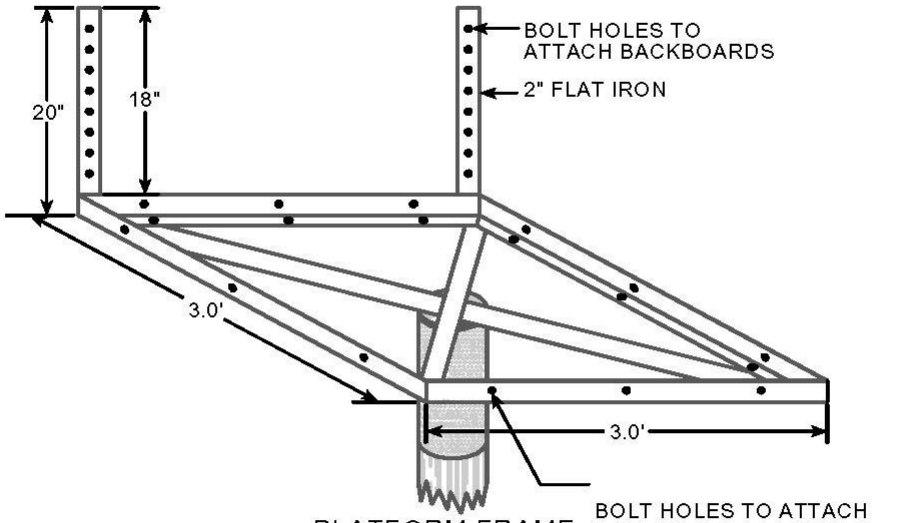

PLATFORM FRAME

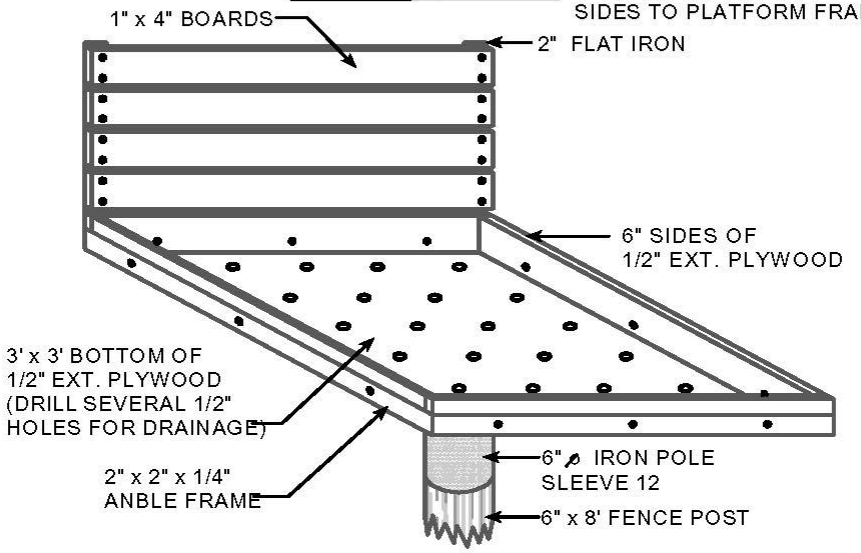

FINISHED PLATFORM

FERRUGINOUS HAWK PLATFORM

DESIGN BY: H. POSTOVIT, 1984

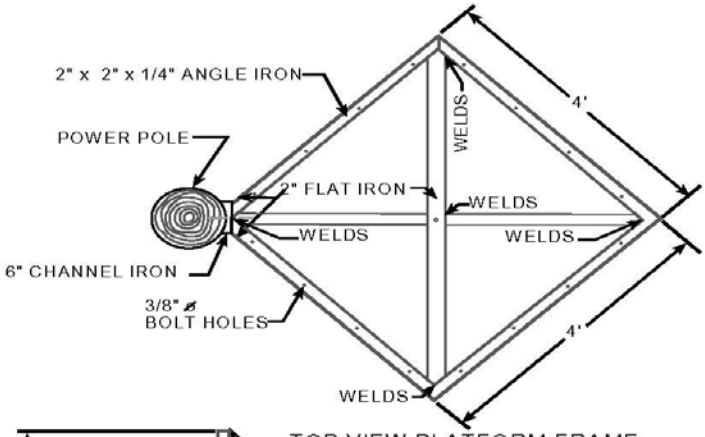

TOP VIEW PLATFORM FRAME

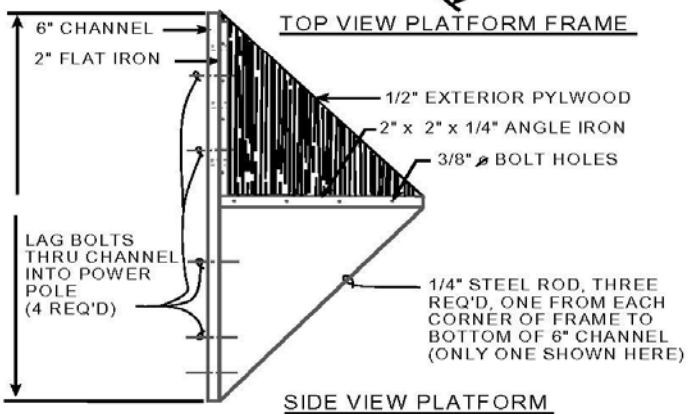

SIDE VIEW PLATFORM

GOLDEN EAGLE PLATFORM

DESIGN BY: H. POSTOVIT

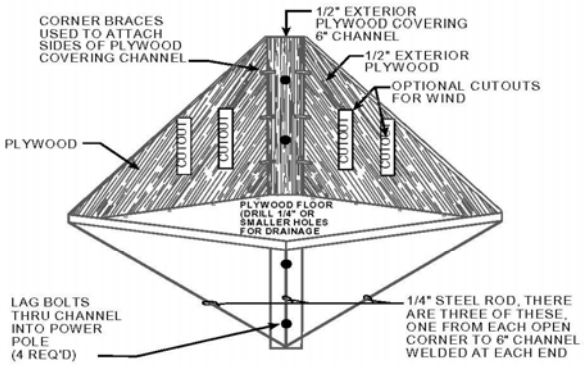

FINISHED PLATFORM

GOLDEN EAGLE PLATFORM

DESIGN BY: H. POSTOVIT, 1981

F. ANIMAL CONTROL

Section editor: Bonnie C. Postovit *Subsection authors: Bonnie C. Postovit/John D. Berry*

Applicability

Animals must be excluded or removed from areas where their presence is not desired, and from areas that may be hazardous. Animal control measures include physical barriers, visual and audio scare devices, application of repellent substances, and animal removal. Raptors nesting in unsuitable areas are a special case of animal control (for more information see the preceding subsection entitled "Raptor Nest Relocation").

Special Considerations

Successful establishment of reclaimed vegetation may require appropriate animal control measures. Such control measures should be viewed as temporary; established reclamation should be self-sustaining under natural conditions. Control instituted to prevent animal access to hazards must be maintained for the duration of the hazard. Control is also necessary where animals damage materials, present a human health problem, or interrupt mine operations.

Techniques

a. Physical Barriers

Physical barriers are a very reliable form of animal control. Barriers can be used to keep big game from decimating vegetation plantings, to prevent bird perching and/or nesting in operations areas, and to prevent rabbit and rodent damage. Barriers include fences, cages, wrap, netting, flashing and screening, and perch-proofing.

(1) Fences

Fences are best used for preventing access over areas larger than a few square meters. Fence design depends upon the species that need to be excluded. Barbed wire, woven wire, electric fence, or chain link can be used to exclude big game and livestock. For more information on fencing, refer to the subsection entitled "Fencing Practices and Wildlife", or the subsection entitled "Creating Livestock Pastures" in the Postmining Land Use section.

Finer material, such as poultry netting or hardware cloth, can be used if rabbits or rodents are the targets of exclusion. Small animals can easily intrude through gaps at ground level and may even burrow under fencing. Staking the bottom of the fence may help prevent intrusion, but below-ground extensions are a more certain means of preventing access by small mammals. For best protection, extensions should be L-shaped, extending at least 15 centimeters below ground level, and 45 centimeters out from the fence. Even these measures will not stop those rodents that are good climbers or burrowing specialists.

(2) Cages

Cages are useful for individual trees, or localized shrub plantings. Such vegetation features may need protection until they are established to the point that they will not be entirely consumed or permanently harmed by grazing or browsing. Cages can be made of woven or welded wire, or hardware cloth. The simplest cages for vegetation are cylinders of woven wire.

Although cages are smaller than fences, sturdy construction is imperative to prevent destruction by large animals. Most types of wire are rigid enough to stand without support. However, where big game or livestock are present, cages should be held erect and in place by fenceposts or rebar. Livestock, in particular, will vigorously rub and scratch on any rigid object in their environment, so cage supports must be designed to withstand such activity. As with fencing, below-ground extensions of enclosure material may be needed to discourage small mammals from burrowing under a cage.

Cages may be open-top or fully enclosed. Open-top cages are necessary for trees. With open-top cages, the *height* and *diameter*, in combination, must be adequate to prevent the targeted species from reaching the tree's trunk and most of its branches until it is large enough to withstand browsing. For example, a two-meter high cage set very close to a young tree's trunk would not necessarily prevent severe browsing damage by deer and elk. Fully-enclosed cages can be used for shrubs or other small- to medium-height vegetation. Cage size should be ample to allow room for expected plant growth.

Cages should not be removed until the trees or shrubs are mature enough to withstand browsing and rubbing. Eventual cage removal should be timed to reduce impact to the unprotected vegetation. This might be during the rest period of a grazing rotation, or in the middle of spring green-up when forage is abundant. Repellent substances (see below) can be applied at the time of cage removal to further decrease the attractiveness of the plants.

Another type of "cage" is the plastic mesh tube frequently used to protect seedling shrubs and trees. This material photodegrades within a few years and may not persist long enough to protect the plant to the point that it is capable of sustaining itself.

(3) Tree Wrap

Wrap is designed to prevent damage to tree bark. Immature trees may need wrap to avoid damage from browsing, rubbing, and gnawing. Various plastic and paper wraps are available commercially. Burlap can also be used as wrap material. Light wire such as poultry netting can be used as wrap, but wire does not flex or expand like plastic, paper, or fabric, so care must be taken to ensure that the material does not gouge the growing trunk. To prevent rodent damage, wraps should extend to, or slightly below, ground level. Wraps should be inspected at least once each season, to be sure they are still attached and effective.

In some instances, mature trees may need "wrap" to prevent lethal damage, as from beavers or vigorous livestock rubbing. Chain link fencing material fastened directly around the trunk has proven successful in preserving trees under such assault.

(4) Netting

Netting is the best means of preventing waterfowl and other birds from using contaminated water sources. Fabric or light wire netting can be stretched over cables or rods spanning the area in question. Caution is advised in selecting netting: the netting size must be small enough that birds do not become entrapped in the openings. Flagging can discourage birds from trying to perch on or push through the netting. Heavy snowfall will affect most netting, necessitating annual repair or replacement in some cases.

(5) Flashing and Screening

Flashing and screening are used to exclude gnawing rodents from wooden structures. Flashing must be used around the entire perimeter of the area to be protected, and could be extended in an "L" out from, or under, the base of a wall. Air vents, floor drains, and other openings should be covered with sturdy screening (hardware cloth). When food or other attractions are present, attempts to rodent-proof an entire building are costly and probably futile. It is more effective (and less costly) to place attractive items in well-protected bins.

(6) Perch-proofing

Perch-proofing is used to prevent birds from habitually occupying areas where their droppings and noise are unwanted. Commercial products to prevent perching include sticky substances (which can be rendered ineffective by dust) and perch guards (needle-like wires or bristles). Perch-proofing is not an effective strategy in an area where the availability of potential perches is great.

b. Scare Devices

Visual and audio scare devices can be used to augment other control measures. Used alone, they may not be tremendously effective. Some labor is often involved, for relocating devices frequently may be necessary to maintain their effect.

(1) Visual Scare Devices

Visual scare devices can be as simple as scarecrows or aluminum pans hung on strings. A number of products are available commercially, including flagging, reflective tape, and mock predators. The movement and/or shape of visual scare devices is intended to startle or alarm animals. Used alone, such devices are not tremendously effective. Animals that frequent mining areas are accustomed to strange sights and noises; they often easily habituate to new stimuli. For greatest effectiveness, visual scare devices should be moved or altered every few days to decrease the opportunity for habituation.

(2) Audio Scare Devices

Audio scare devices include species-specific alarm calls and non-specific loud or unpleasant noises. Commercial broadcast speaker systems are available with pre-recorded distress calls of a few bird species, including starlings and finches. Sound systems with loud or ultrasonic noise bursts are used for other species. Explosive devices from firecrackers to rockets to propane cannons have also been employed to decrease depredation and drive animals from an area.

Any non-automated device or strategy will involve labor-intensive monitoring and operation. Even automatic devices require some labor, as frequent repositioning

is necessary for greatest effect. In a situation where animals become habituated to daily mine noise and blasting, audio scare devices used alone are of questionable value. However, they may be worthwhile as part of an integrated animal control approach.

c. Repellent

Repellent substances are chemicals that can be sprayed on vegetation or scattered on the ground to inhibit grazing or browsing on treated areas. A number of products are available commercially. The usefulness and efficiency of these substances appears to depend upon site-specific factors; not everyone agrees on the value of any one product. It may be wise to contact local extension services, nurseries, and landscapers to determine which products have been most successful against the target animal(s) in a given area.

Repellent application is moderately labor-intensive. The substances must be reapplied at regular intervals, particularly during the active growing season and after precipitation events. While these products can be used alone to inhibit depredation, as with most control measures, they function best in a combined approach.

d. Animal Removal

Animal removal, through relocation or lethal means, may be necessary in specific cases. However, the need for removal can often be eliminated, or greatly diminished, with proper management. Poor housekeeping (and sometimes intentional feeding) lures animals into places where they are not desired. Mice, skunks, bats, raccoons, feral cats, pigeons, and other animals create mess and carry the possibility of disease. Eliminating animal attractants, wherever possible, will reduce human/animal conflicts that necessitate removal. Necessary components of proper management include prohibiting feeding; storing seed and other edibles in rodent-proof bins; and clearing out or fencing off potential den areas provided by wood and rubbish piles. If a removal situation occurs, it is important to not only resolve the incident, but to develop a plan to prevent a recurrence.

Before considering or attempting removal, an operator should contact a State game warden to determine whether removal is legally possible, and whether State and/or Federal permits will be required. If removal is a legal option, it may be best to contract the task to a reliable pest control firm or licensed trapper. This takes advantage of professional experience and expertise, and may ultimately be the cheapest and safest means of accomplishing removal.

(1) Trapping

Trapping can be used to kill or relocate unwanted animals. Snap traps are suitable for small rodents; live traps can be used for animals of any size. It is important to note that relocation may fail due to underestimation of a wild creature's homing ability. And, while relocation may seem a more humane strategy, animals moved outside their own territory are probably more vulnerable to predation, and may be harassed or killed by others of their own kind.

When live-trapping medium to large mammals, heavy gloves should be worn to prevent bites when handling the trap and releasing an animal. If a skunk is the target animal, cover the trap with an opaque tarp when it is set. The trap handler can then approach, move, and open the trap unseen. This greatly decreases the chance of the skunk spraying.

Fatal diseases like rabies and Hanta virus are not common, but those who handle live or dead animals must take sensible precautions. Rubber gloves and face masks are simple safeguards to prevent skin contact with, or inhalation of, infectious agents. Any wild animal bites should be reported immediately to health officials. Consult a physician or public health service regarding the need for precautionary immunization.

Trapping can be labor-intensive due to the sheer number of animals and the need to empty and reset traps frequently. Some traps are designed to capture a number of animals before they must be emptied and reset. A continuous-capture water trap can be constructed from easily available materials.

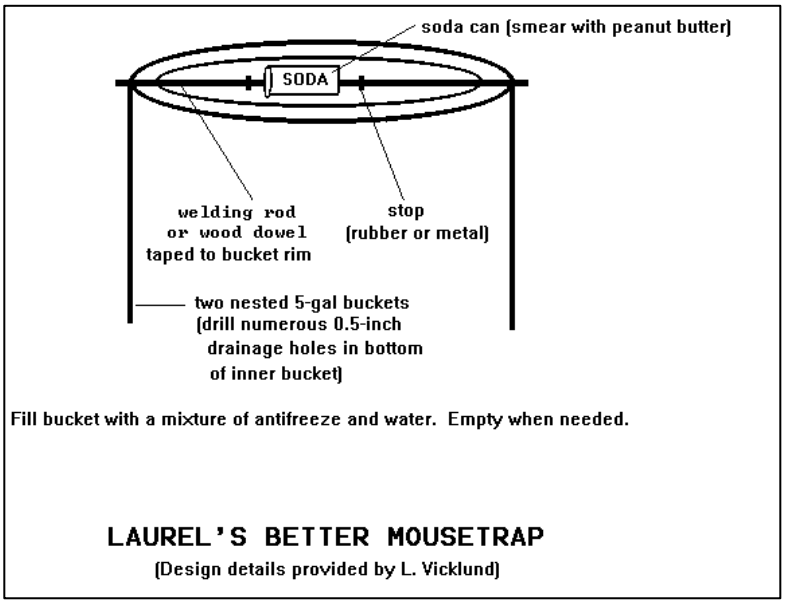

(2) Poison

Rodent removal can be accomplished through the use of poisons. A number of effective poisons are available commercially. Because of safety considerations, the use of poisons should be consistent with mine site practices involving hazardous substances. Material Safety Data Sheets (MSDS) for each product must be available and on file.

Poison baits should be clearly labeled, and set within an outer protective box. Small entry holes in the outer box prevent non-target animals from accessing the bait. Baits placed along walls or other barriers are more likely to be encountered by small mammals than those put in the middle of an open floor. Entry holes in the bait boxes should be cut at the corners where the box meets the wall, to intercept normal rodent travelways.

(3) Cats

Cats can be very effective in controlling a rodent infestation. However, it is irresponsible to encourage feral cats to colonize and reproduce uncontrolled. Feral cats can adversely effect many non-target wildlife species, and they can carry rabies and other diseases. Even carefully controlled domesticated cats can have a significant adverse effect on small birds, particularly during the fledging stage, when entire broods can be exterminated by a barn or house cat in a matter of minutes.

Cats maintained for rodent control should be vaccinated annually, and neutered or spayed. A water source and limited food should be available year-round, to

keep the cats in the designated area. Humane maintenance of an animal requires labor and a little expense, but the rodent control value received in return can be quite high.

e. Raptor Nesting Control

Raptors nesting on highwalls or other operations areas can limit or stop mining activities. Raptors, their nests, eggs, and young, are protected by Federal law. A conflict situation may cause a delay of weeks or months, while operations are altered or suspended until the young fledge from the nest.

To avoid potential raptor nesting/mining conflicts, it is extremely important that thorough raptor surveys be conducted early each breeding season; especially in and near mining areas where nesting cannot be tolerated. State and Federal agencies are more likely to issue permits for raptor manipulation if a company has demonstrated willingness to document potential conflict situations as early as possible each year.

Deterrence and relocation are methods used to control raptors nesting in unsuitable areas. Deterrence is used to discourage nesting attempts early in the breeding season, prior to egg-laying. Deterrence can be accomplished through barriers, removal of the nesting substrate, audio scare devices, or other disturbing activity. Relocation of raptor nests is discussed elsewhere in this section.

NOTE: Federal and State permits are required for any disturbance or manipulation activities involving nesting raptors. If raptors show an interest in a particular site (frequent perching, roosting, carrying nesting material), consultation with Federal and State agencies should be initiated immediately to determine which methods of deterrence should be employed. Deterrence is not always successful; the birds may not move, or may move to a site that is even less suitable (from a mining standpoint) than the original site.

(1) Barriers

Barriers such as a wire cage or a tarp can be used to cover a potential nest site on a highwall.

(2) Removal of Nesting Substrate

Substrate removal involves making the nest site permanently incapable of supporting a nest. Highwall faces can be scraped or blasted to remove ledges or potholes. Trees, windmills, old buildings, and other structures adjacent to mining activity can be removed. This strategy can be employed as a preventative measure, even when no raptors have shown interest in a site.

(3) Audio Scare Devices

Audio scare devices, such as propane cannons and pistol-launched noisemakers, can discourage raptors from using a potential nest area. These

methods can be quite labor-intensive. Cannons need to be repositioned frequently (every other day) to maintain effectiveness, and field personnel must visit the site daily to employ pistol rockets.

(4) Human Disturbance

Other disturbance can include flushing the birds from the site at every opportunity, or simply increasing general mining activity in the area of nesting. Disturbance should be used in conjunction with other methods, as raptors may simply tolerate increased disturbance. Also, it may not be feasible to schedule work in an area for a period of time long enough to discourage nesting activity.

G. REFERENCES

Wyoming Department of Environmental Quality, Land Quality Division (WDEQ-LQD). 1979. WDEQ-LQD Guideline No. 10: Fencing. WDEQ-LQD, 122 W. 25th St., Cheyenne, WY 82002. 5 pp.

Bureau of Land Management. 1974. Proceedings: Regional Fencing Workshop. BLM, Washington, D.C. 74 pp.

Olendorff, R.R., A.D. Miller, R.N. Lehman. 1981. Suggested Practices for Raptor Protection on Power Lines -- State of the Art in 1981. Raptor Research Foundation, Carpenter St. Croix Valley Nature Center, 12805 St. Croix Trail, Hastings, MN 55033. 111 pp.