POSTMINING LAND USE

Section Editor: Mickey Steward

Handbook of Western Reclamation Techniques, Second Edition

TABLE OF CONTENTS

SECTION 6: POSTMINING LAND USE 2
A. Introduction 2
1. ..... Federal Regulatory Requirements 2
2. ..... Land Use Types 2
3. ..... Wyoming Land Use Types 2
4. ..... Technological Advances and Utility of Land Use Implementation 3
5. ..... Resources for Postmining Land Use Development 3
B. Grazing 3
1. Early Implementation of the Postmining Land Use: Grazing as Husbandry 3
Applicability 3
Special Considerations 3
Techniques 3
a. Benefits to Early Implementation of the Postmining Land Use During the Bonding Period 3
(1) Grazing as Husbandry 4
(2) Grazing for Landscape Enhancement 4
(3) Grazing as a Source of Income 5
b. Grazing Management 5
2. Establishing and Controlling a Grazing Program on the Mine Site: Initial Planning 5
Applicability 5
Special Considerations 6
Techniques 6
a. Defining Program Goals 6
b. Selecting a Grazier 6
(1) Flexibility 7
(2) Condition of Grazier's Current Operations 7
(3) Livestock Condition 7
(4) Self Motivation 7
c. Deciding on the Species and Type of Livestock 8
d. Facilities and Specialty Equipment for the Grazing Program 9
e. Obtaining Concurrences and Permissions 10
3. Establishing and Controlling a Grazing Program on the Mine Site: Writing the Grazing Contract 11
Applicability 11
Special Considerations 11
Techniques 11
a. Writing the Grazing Contract and Establishing Expectations for the Grazier 11
(1) Payment by Grazing Days 11
b. Renewing the Contract 13
c. Payment Adjustment 13

NOTE: Pages missing from Table of Contents.

SECTION 6: POSTMINING LAND USE

A. INTRODUCTION

Section editor: Mickey Steward

1. Federal Regulatory Requirements

Land use management at surface coal mines is unique amongst environmental management activities because postmining land use is the centerpiece of the governing environmental statute for coal, the Surface Mining Control and Reclamation Act (SMCRA) of 1977 (95th Congress, Public Law 95-87, 1987). This act states:

> "Each reclamation plan... shall include... a statement of: the use which is proposed to be made of the land following reclamation, including a discussion of the utility and capacity of the reclaimed land to support a variety of alternative uses and the relationship of such use to existing land use policies and plans...; a detailed description of how the proposed postmining land use is to be achieved and the necessary support activities which may be needed to achieve the proposed land use."

The language clearly directs the focus of mine environmental activity towards utilization of the landscape following mining. Thus, postmining land use is the culmination of surface coal mining and environmental management activities at each mine. Many state statutes and regulations reflect the Federal emphasis on postmining land use.

2. Land Use Types

While provisions are made in both Federal and State regulations for postmining land uses different from premining land use, considerable difficulties can be encountered in making a land use change. As a result, at least in Wyoming, postmining land use is typically the same as premining land use. Land uses are specifically defined by state regulation. In practice, there is no one single postmining use of the land. For example, while the single most common postmining land use in Wyoming is grazingland, that land use includes use by wildlife. Other postmining land uses that have been, or may plausibly be, employed in Wyoming are “fish and wildlife habitat,” “recreation,” and “industry.” “Residential use,” while possible, is not as likely.

3. Wyoming Land Use Types

As the "Cowboy State", Wyoming has a long heritage of interaction between the landscape, people, and livestock. Wyoming also has the particularly rich and precious resources of high wildlife and low human population densities. Postmining land uses in this state should thus conserve and enhance both this heritage and these resources. The remainder of this section will thus focus on **grazingland** as the land use that preserves the Wyoming land use heritage.

Similar to other technologies, livestock grazing is continuously evolving. Grazing practices have benefited from extensive research, from active application and modification of technology, and from increasing awareness of the interaction between man's activities and the environment.

4. Technological Advances and Utility of Land Use Implementation

Part of the challenge of establishing a postmining grazingland is incorporating the technological and environmental advances in grazing, and designing the system in such a way that the benefits of technology can be maintained. Relatively small changes in the design of a grazingland can adapt the land for use by wildlife as well. To meet this challenge, an ongoing dialogue between the mine, the regulator, and the postmining land user, along with an active program of testing and development, should be maintained during mining.

Failure to actively address postmining land use needs during the active mining and bonding period will only result in difficulties at the time bond release is sought. In addition, the benefits of a well-designed grazing program during the active reclamation period are many, and include diversification of the vegetation, increased rate of soil development, reduction of undesirable species, and enhancement of wildlife habitat.

5. Resources for Postmining Land Use Development

Local ranchers, concerned citizens, the Natural Resources Conservation Service, the County Extension Agent, the local Conservation District, the State University, and the State Land Quality authority are all sources of input and information on the development and implementation of the specifics of the postmining land use plan. In addition, the history of the region, including both successful and unsuccessful business and agricultural pursuits, can provide valuable information as the postmining land use plan is developed.

B. GRAZING

1. Early Implementation of the Postmining Land Use: Grazing as Husbandry

Section editor: D.G. Steward *Subsection authors: D.G. Steward/R.S. Shinn*

Applicability

Utilization of a livestock grazing program for postmining land use provides many benefits. Proper grazing management is a powerful tool in the development and maintenance of grassland and prairie ecosystems, and can positively affect the health and reproduction of many types of grasses. Practices that improve rangelands also improve wildlife habitat, aiding in the re-establishment of wildlife in postmining landscapes. A grazing program aids in demonstrating postmining land use as well as collecting information necessary for bond release.

Special Considerations

Agreement must be made between the regulatory agency, the landowner, and the mining company before grazing can commence on permanent revegetation. Permission may also be required from the U.S. Forest Service, the State, the Bureau of Land Management, or other regulatory agencies.

Techniques

a. Benefits to Early Implementation of the Postmining Land Use During the Bonding Period

Implementation of the postmining land use during the bonding period can have many benefits, regardless of the type of land use. These benefits include the opportunity to

evaluate the implementation of the use to ascertain if reclamation processes are adequate to support that use; coordinate activities with the regulatory agency to ensure their familiarity with the selected land use and its particular implementation; derive income from the implementation of the land use; and improve the postmining landscape cost effectively and without re-starting the bond clock.

(1) Grazing as Husbandry

Improving the postmining landscape without resetting the bond clock falls into the category of husbandry. Not all postmining land uses can be considered husbandry practices. However, in the State of Wyoming, it has been agreed (WDEQ-LQD Guideline No. 14, 1991) that grazing can be used as a husbandry practice.

There is no prohibition on grazing being used as a husbandry practice immediately following re-establishment of vegetation cover in the postmining landscape. The regulations usually require that **permanent revegetation** be protected by fencing or other means **from being destroyed** by livestock during the first two years following planting. In addition, again for **permanent revegetation**, agreement must be made between the regulatory agency, the landowner, and the mining company that grazing can be commenced. In some cases, this also requires the permission of another regulatory agency, most typically the U.S. Forest Service, the State, or the Bureau of Land Management.

(2) Grazing for Landscape Enhancement

Grazing, which is often viewed as detrimental to the landscape, is a very powerful tool for amending and improving the landscape. Proper grazing practices have been documented in both formal and informal studies to provide the following benefits:

(a) Stimulation of root growth, which provides individual plants with increased drought and disease protection;

(b) Maintenance of optimum litter levels, which leads to maximum water retention in postmining soils and minimum runoff, thus decreasing erosion;

(c) Removal of excess biomass, which improves plant growth and reproduction, and leads to increased palatability and decreased senescence of individual plants;

(d) Creation of surface microsites, which provides locations for germination and establishment of new individuals and creates surface roughness to enhance water retention;

(e) Seed dispersal and colonization from adjacent native areas, which leads to diversity and elimination of an agricultural appearance; and

(f) Weed suppression, which is usually required by State law, and can assist in hastening natural successional processes.

The keys to grazing as an agent of landscape enhancement are discussed in the following sections: Establishing and Controlling a Grazing Program on the Mine Site; Creating Livestock Pastures; Water Sources for Livestock; Moving Livestock; Vegetation Quality for Grazing; Timing of Grazing; and Grazing, Wildlife, and Wildlife Habitat.

(3) Grazing as a Source of Income

Finally, the mining company can realize increasing amounts of income from ongoing use of the postmining landscape, providing financial verification for the company's contention that the postmining land use has been achieved. This income, while small in relation to the income to be derived from mining, can significantly defray revegetation costs over time, thus leading to an overall reduction in mining costs.

b. Grazing Management

Grazing is integral to the development and maintenance of grassland and prairie ecosystems, and to the health and reproduction of many types of grasses. Proper grazing management can and must take the place of the large herds of herbivores that formerly roamed the Great Plains. Proper grazing management will ensure the preservation of open space and vegetation for prairie wildlife habitat. Practices that improve rangelands also improve wildlife habitat, thereby assisting the mine in reaching another important goal, that of re-establishing wildlife in postmining landscapes.

Grazing is simply a means of managing the grassland resource. Grazing is but one of the many possible reclamation management tools, but good livestock management is an essential tool for landscape management. Re-establishment of the grazingland land use will fail without expert stock management. However, the resource that is the centerpiece of the program is not the livestock but the landscape itself. Proper management of the landscape will ensure that livestock production goals are optimized.

For the mining company, developing a grazing program early in the reclamation cycle can reap benefits in addition to those outlined above. Because postmining land use is central to SMCRA, the mining industry must unequivocally demonstrate that the approved postmining land use has been achieved. A long-established program will support, with a continuous grazing history, the information that must be collected in the two years previous to seeking bond release. An established grazing program can facilitate the collection of the bond release information because bond release data will be collected within the framework of a well-established and smoothly functioning postmining land use program.

2. Establishing and Controlling a Grazing Program on the Mine Site: Initial Planning

Section editor: D.G. Steward *Subsection authors: D.G. Steward/R.S. Shinn*

Applicability

While there may be no regulatory requirement for a specific grazing plan each year, a detailed written plan for grazing will significantly improve program implementation. The annual plan

should include computation of grazing days by pasture, and address water, mineral, and supplementation requirements. The plan should include a map and a grazing sequence. The map should be kept current with respect to permanent fence, gate, and water locations. This grazing plan should be developed at least three months before implementation of the annual program is anticipated, and should be carefully reviewed with the grazier.

Grazing sequencing can be complicated, particularly when husbandry goals are being incorporated. The Environmental Engineer (EE) should allow plenty of time for the development of the annual plan, and should seek review by his or her manager, by security personnel, and by safety personnel prior to implementation.

Special Considerations

Selecting the proper grazier can be very difficult, but is extremely important to the success of the program. The grazier must exhibit enthusiasm, flexibility and cooperation, and genuine care and concern for the livestock. Because the grazing program is likely to be a showpiece item, the grazier must perform to showpiece standards.

Techniques

a. Defining Program Goals

Before other aspects of a grazing program can be established, the EE or specialist who has been given charge of the program should carefully define the **goals** of the program. Consideration should be given to all the potential benefits discussed in the subsection entitled "Early Implementation of the Postmining Land Use; Grazing as Husbandry". Thought should be given to the specific application of these concepts to the particular mine site. Consideration should also be given to the information discussed below, as well as to the other topics in this section.

Paramount consideration should be given to the degree of support, both financial and programmatic, that can be expected from mine management. The desires of management should be incorporated in the program. Some managers will be extremely interested in the program and will provide many ideas and much support. Other managers may be less supportive. If the EE is unsure about long-term commitment to the program, the best advice is to develop a program that is simple to terminate. The stability of the program will be of critical importance to the grazier, as will be discussed below, and will affect both the cost and timing of the program.

Once a program is developed and is working properly, it should be highlighted through education and tours as part of the overall mining effort. This will aid in maintaining support for the program and will also provide a focus for employee pride and interest in the company. However, a poorly managed and executed program will do more harm than good in meeting company objectives. Thus, the EE charged with implementing the program must be thoroughly invested in the success of the program.

b. Selecting a Grazier

Unless a mining company is willing and able to allocate significant resources in terms of manpower and money to a ranch-type program, a good working relationship with a grazier is needed to implement a grazing program. While the EE must take complete responsibility for the grazing program, the EE typically can allocate only limited time to

the actual implementation of the program. Thus, the grazier is the EE's greatest asset in developing a postmining grazing program.

Selecting a grazier can be extremely difficult. In ranch country, practically everyone you meet claims to be an expert on livestock and grazing, and many of these "experts" are so mired in the way things have always been done that the EE will continually battle with them over every aspect of the program. The EE must locate a grazier who is enthusiastic and cooperative, who is willing to give more than lip service to the goals of the program, who is flexible and easy to work with, and who truly exhibits care and concern for his or her livestock. Without question, the EE should visit the operations of a prospective grazier and watch the grazier in operation. When negotiating with a prospective grazier, the following issues should be given careful consideration:

(1) Flexibility

When the EE begins discussion of the program goals, does the prospective grazier immediately discount the goals with his or her ideas of how it won't work, how impractical the goals are, or how to do it differently? This is a paramount warning signal that this grazier will not make a success of the program.

(2) Condition of Grazier's Current Operations

What is the condition of the range on the lands where the prospective grazier is currently grazing? Pastures as bald as an egg, with well-established trails along fences and water, do not bode well for the success of this grazier on your reclaimed ground.

Are the grazier's operations neat and tidy? If his or her property is dilapidated and unsightly, these characteristics will transfer. Be sure to check the water locations and fences -- poor conditions indicate a grazier who will not have the interest and enthusiasm to properly implement your program.

(3) Livestock Condition

When visiting the grazier's current operations, observe whether the livestock are calm and healthy (beware of a grazier whose livestock run from him!!). You don't need to be an expert to recognize skinny, sorry animals.

If at all possible, observe the prospective grazier as he or she works livestock. Is he or she calm, efficient, and careful with the stock? Lots of yelling and running are sure indicators of a grazier who will not work well in your program.

(4) Self Motivation

Does the grazier have a plan for the necessary stock numbers and manpower needs of your program? The grazier should be able to produce a coherent plan.

Finally, while a "know-it-all" cowboy is the opposite of what the EE needs, a prospective grazier who can and will contribute ideas and thoughtful attention to the goals of the program will be a valuable resource to the EE. A self-

motivated grazier who is invested in the goals of the program will make or break the program.

A final word of advice: Often, for political reasons or simply out of convenience, the mining company will want to hire the neighbor next door or the rancher who currently is leasing lands from the company that have not yet been mined. This can certainly be a success, but the prudent EE will resist this idea if it runs contrary to program goals. Active selection of an appropriate grazier can sometimes overcome the inertia of using the neighboring rancher. On the other hand, don't fail to investigate the neighboring rancher. For convenience and ease of program implementation, nothing beats an adjacent operator.

c. Deciding on the Species and Type of Livestock

Many species of livestock are available for a grazing program, and the temptation to develop an unusual program can be strong. More than one mine manager has asked for buffalo on the reclaimed land. Before the EE selects the species and type of livestock for his or her grazing program, all subsections in this section should be carefully reviewed. The selection of the species of livestock should follow naturally on the heels of an initial program review. Most especially, the EE should consider:

(1) Is there a grazier available who operates the species of livestock under consideration, and are the livestock themselves easily available?

(2) What are the front-end costs for facilities, especially water, fencing, and handling for the species of livestock under consideration?

(3) How easy is it to handle and move the species of livestock under consideration?

(4) Do the livestock under consideration offer any health or safety risks to the mine workforce?

As with any endeavor, the program with the greatest possibility of success is that with the fewest opportunities for failure. Simply put, a mine in cattle country is probably best off running cattle. Sheep can also be considered. Whatever the choice, it is prudent to

save the more esoteric grazing programs for the time when the grazing program itself is well established. Those buffalo may prove to be more expensive and more difficult to handle than first imagined.

Most of the discussions that follow in this section on postmining land use will center on cattle grazing. Cattle are extremely easy to manage. They are readily available and have predictable grazing and behavior patterns. The novice program manager will have a very good chance of success if cattle are selected as the grazing animal. However, the selection process does not end with the species of livestock. Following the selection of livestock species, the **type** of livestock must be selected. The types of livestock include cow-calf pairs, dry cows, weanlings, yearling heifers, yearling steers, and bulls. Each has its advantages and disadvantages.

Of all the animal types, dry cows or bred cows are the easiest to manage. A dry cow is a cow without a calf. Dry cows and bred cows are well-behaved and easy to move. However, unless the grazier is running a cull cow program, dry cows and bred cows are usually only available in the fall and winter. In the spring it is the cow-calf pair that is typically available. Young calves can be difficult to move, even with their mothers, and frequent movement may negatively affect their gain. Cow-calf pairs are best run on reclaimed land after the calves are two months old.

Weanling calves are not a good choice for reclaimed land grazing. They can be skittish and may become ill. Once these animals have reached yearling status, they are good grazing candidates. Yearling steers are frequently used for grazing programs because there is no worry about accidental breeding. Steers will also gain weight more rapidly than heifers. However, Steers can be friskier than heifers and more difficult to train. Steers can also be afflicted with water belly, a urinary tract problem that is difficult to treat and often fatal.

Spayed yearling heifers are docile and easy to move; however, they will not show the weight gain of steers. Yearling heifers for breeding can be profitable, but their management includes the added management of the reproductive season. The confined pastures typical of the reclaimed grazing program make for excellent breeding pastures. The EE should be cautious of the grazier with a long breeding season. Bulls, whether with cow-calf pairs or with heifers, can get restless once breeding has been completed, and the good grass and small pastures typically found on reclaimed land will shorten the breeding season.

The final selection of animal type should be based on the needs of the grazier and the security of the grazing situation on the mine. Ease of handling should also be a major consideration. While there is a great deal of talk about the relative merits of animal **breeds**, this decision is best left to the grazier. The relative docility of Herefords or Salers, for example, is not something on which the EE needs to pass judgment. Occasionally, mine management will desire one breed over another, Longhorns over Angus, for example. If this can be accommodated, there is no reason not to do it, providing the proper grazier can be located.

d. Facilities and Specialty Equipment for the Grazing Program

Running cattle during the spring, summer, and fall requires very little in the way of equipment. Of paramount importance is water, which is discussed in greater detail elsewhere in this section. Following water in importance is fencing, which is also discussed as a separate subsection. Depending on the time of year, fly tags or some method of fly control will be necessary. The EE should discuss the specifics of fly control with the grazier, keeping in mind that proper pasture rotation will reduce fly problems. Typically, the grazier will supply fly control.

When grazing reclaimed ground, because of the uncertainties of reclaimed land geochemistry, it may be wise for the mine to supply mineral supplementation for the cattle. This will minimize complaints regarding animal health based on, however, erroneously. the condition of the mine soils. There is no need to conduct a soil sampling program for mineral deficiencies. The local feed store can suggest a full-range mineral that will be adequate for the needs of the program. The EE should confirm his or her selection with the grazier prior to obtaining the mineral.

Devices for actually feeding mineral to the cattle will be needed. Many commercial devices are available for this purpose, but portability is the primary concern. Plastic 55-gallon drums cut in half lengthwise are inexpensive and are difficult for the cattle to tip over. Using two holes drilled in each end, halves can be equipped with a stout string and easily pulled from one paddock to another. The halves can be connected in trains of six or seven with no difficulty. The trains can also be used to feed supplement. The mine may supply mineral and mineral feeders, unless otherwise desired by the grazier.

The final consideration for facilities is some reliable means to load and unload the cattle. If the cattle are properly trained and are being properly managed, the load-out facilities and processes for delivering and removing the herd as a whole, bulls for breeding, or sick and treated animals, can consist of portable panels and a stock trailer. For large numbers of animals being loaded and unloaded from a stock truck, a portable load-out chute will be necessary. As in all aspects of cattle work, proper handling of the animals will reduce the need for special facilities. Typically, the grazier supplies the load-out facilities.

The EE should carefully discuss and agree upon the facilities needed for the program with the grazier well before the program is implemented. The grazing contract should contain all of the agreements in writing.

e. Obtaining Concurrences and Permissions

Initiating a grazing program on reclaimed ground can require many concurrences and permissions. The EE should allow at least three months, and better six, for obtaining the necessary concurrences and permissions. It is usually necessary to incorporate the general program elements in the mine permit. Specifics of the program and permission for first time grazing must be discussed and agreed upon with the regulatory agency and the landowner. Other regulatory agencies may be involved in the program, particularly the U.S. Forest Service and the Bureau of Land Management.

The mine manager and department manager must concur on the need for the program. Many times the program must be coordinated with the company land agent, or the

person otherwise responsible for managing company lands. The safety manager should review and approve the program. It is also wise to bring operations personnel into the loop early in the process so their comments can be incorporated in the program. Comments and suggestions from security personnel are also very useful.

It is often wise to obtain the advice of the local County Agent, the Natural Resources Conservation Service, any local Conservation Districts, local Game and Fish personnel, and any wildlife consultants for the property. Integrating the grazing program with wildlife use of the reclaimed surface will achieve the best possible results for your program.

3. Establishing and Controlling a Grazing Program on the Mine Site: Writing the Grazing Contract

Section editor: D.G. Steward *Subsection authors: D.G. Steward/R.S. Shinn*

Applicability

The grazing contract must be written to give the Environmental Engineer (EE) in charge of the program maximum control. All aspects of the grazing agreement must be addressed in the contract.

Special Considerations

Writing the grazing contract by the grazing day provides the best means to control consumption of the resource as well as a payment schedule that accurately reflects that consumption. When calculating fees, consideration must be given to the amount of work expected of the grazier. Grazing day calculations should be reviewed each time the contract is renewed.

Techniques

a. Writing the Grazing Contract and Establishing Expectations for the Grazier

There are three ways of writing a grazing contract: by the acre, by the animal, or by the grazing day. By the acre is the method apparently most simple, but it is almost impossible to retain control over animal movement and the timing of grazing if the grazier is paying for the property by the acre. The grazier will be inclined to graze as long and as hard as possible to obtain the best value for his dollar.

While more controllable than an acreage contract, a grazing contract by the animal, or more specifically, the animal-unit, is fraught with similar hazards. In this case, the grazier may be inclined to overstock the property or conversely, under-use the resource.

(1) Payment by Grazing Days

The EE can exercise most control over the grazier through payment by grazing days. Payment by the grazing day forces the EE to make a realistic evaluation of the grazing resource, provides a means to control consumption of that resource, and provides a payment schedule that accurately reflects consumption of the resource. Calculation of the number of grazing days available is a major controlling variable of the grazing program and should be carefully researched. Grazing days are calculated as:

$$\text{Grazing Days} = ((\text{AFP/Acre} * \text{PU}) / (\text{FC} * \text{EAU}) * \text{AA} * 365)$$

(a) AFP/Acre = Annual Forage Production per Acre

This number can be estimated from baseline permit data, revegetation data, or the County Agent. Dry forage is the variable commonly used.

(b) PU = Palatability * Utilization

Palatability for reclaimed forage is usually fairly high because it is mainly grasses. A typical number is 80 percent (0.8), but the number can drop to 50 percent (0.5) or less if the vegetation is dry, old, or weedy. A reasonable estimate is 75 percent (0.75), but this should be evaluated case-by-case.

Utilization is the amount of the forage resource the EE wants consumed. This number depends upon the time of year, and can be higher when the vegetation is dormant than when it is actively growing. Utilization of actively growing vegetation is typically 55 percent (0.55). Utilization of dormant vegetation can be as high as 70 percent. A reasonable estimate is 50 percent (0.5), but this should be evaluated case-by-case.

(c) FC = Forage Consumption

When animals have free choice feed, forage consumption can range up to 35 or 40 dry pounds per day. Winter feed rates are usually calculated at 25 to 35 pounds per day per animal unit. A reasonable estimate is 30 pounds per animal unit, but this should be evaluated case-by-case. Be sure this number is in the same units (pounds or kilos) as the Annual Forage Production.

(d) Equivalent Animal Units (EAU)

1.0 AU = Cow-calf pair

0.5 AU = Weanling calf

0.7 AU = Yearling animal

0.8 AU = Dry or cull cow

1.5 AU = Bull

These numbers can be modified to some degree at the discretion of the EE, with agreement from the grazier. The designation is time-sensitive, and is based on the probable forage consumption of the animal. Consultation on the proper assignment of animal unit values can be obtained from the County Agent, the Conservation District, or the Natural Resources Conservation Service.

(e) AA = Available Acreage

This is the acreage that is available for grazing. Be sure to remove acres that are disturbed or otherwise in use.

b. Renewing the Contract

Grazing day calculations should be reviewed each time the contract is renewed, and any pertinent knowledge gained from grazing the reclaimed ground should be used to modify the formula where appropriate.

Cost per grazing day can be extremely variable, but should be consistent with long-term lease and grazing agreements in the area. Because the grazier is being asked to operate in non-typical ways, it is usual to grant a slightly reduced grazing fee. In 1994, a reasonable grazing day fee on reclaimed lands in Campbell County could vary between $0.35 and $0.50 for non-snow conditions. Consideration for the amount of work expected of the grazier must be incorporated in the grazing day fee, as must local grazing fees.

c. Payment Adjustment

When grazing days are used as the basis for the grazing agreement, the grazier can adjust animal numbers and timing of grazing at his discretion. One cow for 100 days and 100 cows for one day equate to the same number of grazing days. However, the goals of the grazing program must be considered when adjustments are desired. With grazing days, payment adjustments can easily be made for animal loss or removal. Provisions should be made in the contract for removing animals from the leased area in case of drought. The contract should also address any absolute time limits that may be placed on the program. For example, it may only be possible to graze from May to September. These constraints should be clearly stated.

The contract should address all other aspects of the agreement, including facilities and equipment, the need for Mine Safety and Health Administration (MSHA) training for the graziers, whether or not four-wheelers or horses can be used on the property, and the obligation of the grazier to fulfill the requirements of the grazing contract. The initial condition of the property and who will be responsible for fence repair and water facilities should also be included, as should the frequency at which the grazier intends to check the stock, and the response time for gathering strayed animals. Contract language should otherwise follow standard legal format for land use agreements. Maps or exhibits may be needed to complete the contract.

The terms of the contract are extremely important. The grazier will always desire maximum stability in the contract. Typically, however, a grazing contract is for one year. This gives the EE a straightforward route to extricate himself or herself from the contract, if necessary. In addition, it gives both the EE and the grazier the opportunity to negotiate price changes based on market conditions. After a good working relationship is established with the grazier, the contract period may be extended.

4. Establishing and Controlling a Grazing Program on the Mine Site; Implementation

Section editor: D.G. Steward *Subsection authors: D.G. Steward/R.S. Shinn*

Applicability

Developing a grazing program on reclaimed lands can be time consuming. However, the rewards will far outweigh the difficulties. The Environmental Engineer (EE) in charge of the project

must be given the support and resources to conduct a successful program. When this occurs, the program can be an ongoing source of satisfaction to all involved.

Special Considerations

The successful grazing program should be continually growing. The program will expand as more reclaimed land becomes available, and improve as the successes and failures of each year are applied to the following year.

Techniques

a. Training and Education

Training and education of the EE, the grazier, mine site employees, mine management, and regulatory personnel will all contribute to program success. When possible, both the EE and the grazier should be exposed to different grazing programs, and both should keep current on grazing literature. Records should be kept of the annual grazing plan, and the successes and failures of each year should be discussed and applied to the following year. Mine site employees should be kept informed of the goals and the specifics of the program each year. Mine management must definitely be kept aware of the successes and setbacks of the program.

The EE should plan to write progress reports for the regulatory agency, and memos for the workforce and management. Multi-media presentations and tours are a great way to obtain program support. A photographic record of the program is also very useful, particularly when requesting bond release.

b. Expanding the Program

Because reclaimed lands are continually expanding, the grazing program will also continually expand. Planning for expansion will depend on program goals and should be discussed well in advance with the grazier, who may need to supply additional animals. In addition, the EE must budget both time and money for fencing and water additions, and contact the regulatory agency before expanding onto formerly ungrazed lands.

The grazing program will eventually become a major focus of the reclamation effort, and will reap many rewards for the company. It is important, therefore, to spend the time needed to continually update and improve the program, and to monitor to ensure that program goals are being met. The program must be responsive to the needs of the landscape.

c. Livestock Tips for the Environmental Engineer

While it is unreasonable to expect every EE to be an expert in range and livestock management, there are a few key actions that can go a long way toward ensuring the success of a grazing program. First and foremost, take the time to check the pastures occasionally, at least once a week during the grazing season. If the mine site has security people, they are often willing to check the stock for you every day. However, you or the security people are **not,** *repeat* ***not*** a substitute for the grazier. Look for the following:

(1) The Development of Trails

The development of trails is a surefire sign that the livestock are remaining in the pasture too long. The EE should expect some temporary degradation of the pasture around the water source. With proper management, this will disappear during the next growing season. However, beware of distinct trails from all corners of the pasture to the water or along the fences. Livestock should be removed from a pasture immediately **before** these trails develop. It is the responsibility of the grazier to perform this task and he must be responsive to the concerns of the EE.

(2) Animal Health

Scan the herd for animals with droopy ears, snotty noses, sore feet, or sluggish or irregular behavior. If this is observed, contact the grazier immediately. Most sick animals can easily be treated if they are identified early. While herd health is not the responsibility of the EE, a dead animal laying out on the reclaimed ground is not good publicity for anyone. However, the EE should refrain from the temptation to work directly with the grazier's stock. This can lead to uncomfortable relations with the grazier and liability for the EE.

(3) Ample Water and Minerals

Do the animals have enough water and is that water cool? Water stress very often forces the animals to search for better water, and escaping animals on the minesite are a headache no one needs. While in the paddock, check the supplements, if any, that have been put out for the animals. Lack of bloat block in a pasture with lots of alfalfa can lead to disaster.

(4) Fencing

Take a quick look at the fences in the pasture. Any wire that is down should lead to a call to the grazier.

(5) Strayed Animals

Occasionally, despite everyone's best efforts, livestock will stray from the paddock. This can be minimized by good stock handling and proper pasture management. However, the EE should have a pre-arranged plan for this situation. Typically, mine site personnel will notify Security of the situation and Security will contact the grazier directly. Make sure a procedure for stray livestock is developed, is in writing, and has been properly communicated to everyone.

5. Creating Livestock Pastures

Section editor: D.G. Steward *Subsection authors: D.G. Steward/R.S. Shinn*

Applicability

To a large extent, the grazing program is controlled by the pasture plan. The Environmental Engineer (EE) should spend plenty of time developing the plan, and take into consideration the

advice of many. The pasture design must support the goals of the program while maintaining maximum flexibility and growth potential in the system.

Special Considerations

As in all other aspects of a grazing program, the prudent EE will take the time to develop a reasonably detailed plan of pasture locations. The pastures should be mapped, and each year the new plan for pasture rotation should be placed on the map, along with any pasture upgrades. The date the pasture is first brought into the rotation is a useful piece of information to have on the pasture map. Unfortunately, it is easy to let the pastures grow helter-skelter, only to find out one year that there is no adequate map of the grazing facility. Don't succumb to the temptation to leave the map upgrade for "later in the year."

Techniques

a. Pasture Size

Pasture size is of great importance, and is very dependent on the number of animals and the timing of grazing. Calculations related to pasture size are discussed in further detail in the subsection entitled "Timing of Grazing". Husbandry goals such as removal of biomass and alteration of the surface are greatly affected by pasture size. The general rule is, the smaller the pasture, the better. However, small, permanently fenced pastures can be prohibitively expensive, and have a nasty habit of being disturbed by unforecast mine activities such as road building or tank installation. Pastures are always a compromise between goals, budget, and convenience. Nonetheless, the size of the pasture is a powerful grazing tool, and its value is well worth any extra effort needed to optimize the pasture design.

Central to the definition of pasture size is the concept of uniform application of grazing pressure. Pastures should be designed to receive uniform grazing pressure. The other, equally important, concept is timely removal of grazing pressure. Retention of adequate residual is the secret to good pasture management. Pasture size must support both of these concepts.

When herd effect is important, the best practice is to have as many animals on the ground as there is grass available for them. This usually means large numbers of animals and small pastures. To achieve this, a good practice, particularly in the initial stages of the program, is to establish a few permanent perimeter fences and subdivide the interior of the pasture with electric fence. High tensile one-wire electric fence whose location is set for several grazing seasons is a good compromise between man-hours and flexibility. The perimeter fences should be installed to prevent stock break-outs into mine work areas. Once the EE has an understanding of the grazing system, it may then be possible to permanently subdivide some of the larger pastures.

It is important to keep in mind that the livestock are being used to manage the grass resource, not that the grass resource is being sacrificed for the convenience of the livestock. Thus, it is often necessary, particularly on reclaimed ground, to set up pastures specifically designed to minimize a weed problem, trample down excess vegetation, or break up crusted soils. These objectives are legitimate, and can be very

successful. In such cases, grazing intensity should be managed carefully to ensure condition loss does not occur to livestock.

b. Pasture Shape

A circular pasture on flat ground is the theoretically ideal pasture shape because there are no corners or irregularities to diminish the uniform application of grazing pressure. Except in irrigated situations, however, a circular pasture is neither reasonable nor desirable. However, the concept of uniform application is relevant under any condition. Thus, to the extent possible, pastures should be as equal as possible in all dimensions, and with as few corners and tight spots as possible. Extremely rough terrain is not likely to be a consideration on reclaimed ground, but the EE should avoid long skinny pastures and pastures with more than six sides.

c. Location of Supplements, Including Water

Keeping in mind the principle of uniform application of grazing pressure, supplements should be evenly distributed about the pasture to minimize over-utilization of certain areas. Supplements such as minerals and fly control devices are attractants. Their use can be optimized by placing them away from water to draw the stock away from watering areas, which tend to be overused. Attractants should not be placed in areas that tend to become trails, for example, along fence lines. This will only lead to faster and more permanent trail development.

Placing supplements next to the water is almost always an unbearable temptation for the grazier. It is easier for the grazier, and he or she can be sure the livestock are finding the supplements. Remember, however, that supplements are attractants. The livestock will find them. Remember also that the livestock are out in that pasture 24 hours per day. Curious as livestock are, it is extremely unlikely that they will fail to completely explore every square inch of the pasture. Do not succumb to the grazier's tendency to place supplements close to the water. It is likely that the EE will need to keep a close eye on this as it is contrary to all program goals.

d. Adjacency

Another consideration in developing a pasture plan is isolated pastures. Unless isolated pastures are desired for special purposes such as for bulls outside of the breeding season, for horses that are being used in the program, or for sick pens and recovery pastures, they should be avoided. Part of the planning program is to connect all the pastures to the maximum extent possible. This will certainly minimize the possibility of animals getting loose during pasture moves and will reduce the workload for all concerned.

e. Type of Fencing

Next to water, and, in reality, a far distant second in importance to water, is the type of fencing to be used on reclaimed pastures. Fencing should never take the place of adequate pasture, stock, and water management in controlling livestock. A properly trained herd inside properly managed pastures will need very little to restrict them to the pasture. Fences are a poor substitute for good water and good management. On the other hand, loose stock on the mine site are a very real safety threat, so the issue of fences must be diligently addressed. Fences designed to be the ultimate barrier

between livestock and active mine areas should be well constructed and well maintained. Fences must also meet regulatory requirements, which typically are designed to facility the movement of wildlife such as deer and pronghorn antelope.

The EE must constantly be aware of the needs and plans of the mine when developing a fencing plan. It is almost certain that fences will be installed in areas that will later be needed for other purposes. Minimize fence removal and re-installation to the extent possible by working closely with Engineering, Operations, and Construction.

(1) Wildlife

Careful consideration should be given to wildlife when constructing fences for livestock. Even the minimum possible amount of fencing can represent a barrier to wildlife. State Land Quality or Game and Fish guidelines should be followed for fence construction, particularly with respect to spacing between the wires and installation of a smooth wire on the bottom.

Another wildlife consideration is exclusion fencing. Exclusion fencing is used to manage and defer grazing in wetlands and riparian areas. While complete exclusion is not usually necessary, these areas should not be grazed during wildlife breeding seasons, and the timing of grazing of these areas must be carefully managed. For more information, see the subsection entitled "Fencing Practices and Wildlife."

(2) Permanent Perimeter Fence

Where fences will be the ultimate barrier between livestock and active mine areas, fence construction should follow State guidelines. Using “Gaucho” barbed wire and stays will reduce the need for posts. However, be warned that gaucho wire, a lighter gauge and springier type of barbed wire than conventional barbed wire, is difficult to work with, and graziers and fencing contractors may go to great lengths to convince the EE of its undesirability. Nonetheless, field tests have shown this wire to resist snow burden and be more resistant to breakage than conventional barbed wire. It is a fencing tool that should be given careful consideration.

The following figure shows a permanent perimeter fence design that has worked well in many locations. The figure includes information on stays, post depths, deadmen, and construction that should be considered and tailored for the particular location.

Where fences will not be the ultimate barrier between livestock and active mine areas, a three-wire perimeter fence built solely with t-posts and h-braces only at the corner, or 1-wire high-tensile electric fence work very well. These fences are relatively easy to remove. The electric fence is a very safe bet IF it is hot. Never run an electric fence at less than 7000 volts and you will never have an excursion.

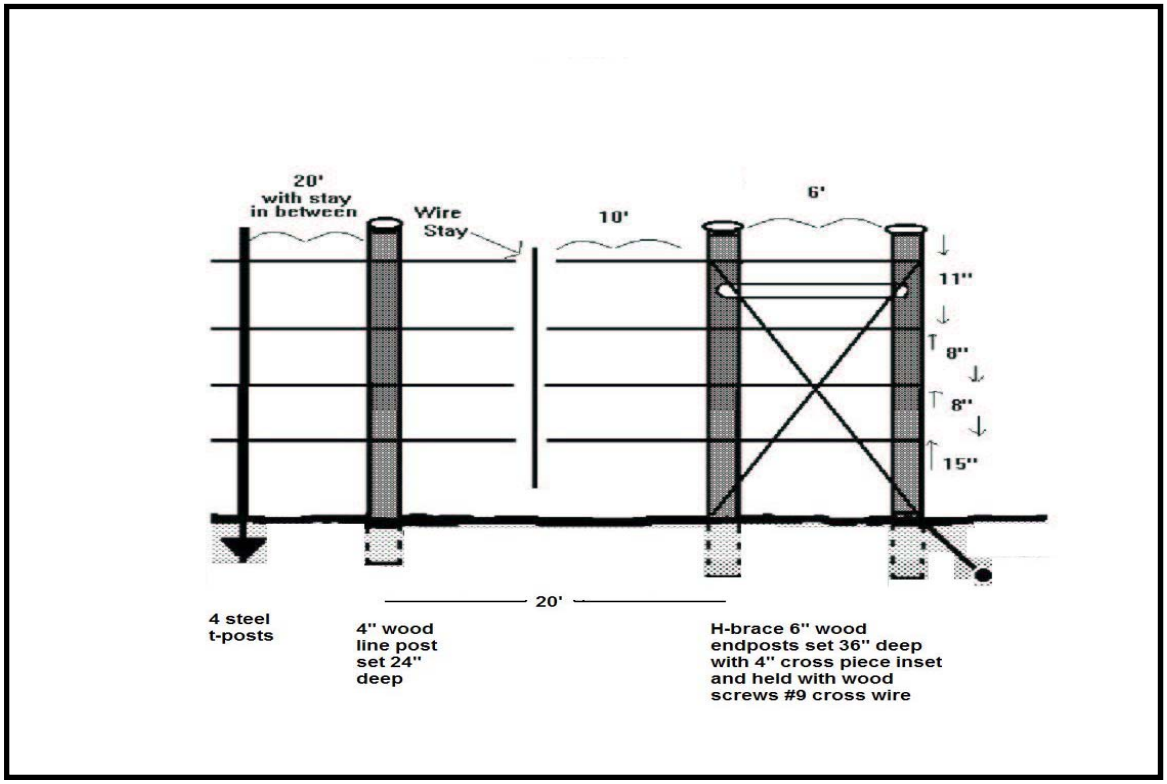

Fence

Construct a four-strand wire fence, using 15-½ gauge wire. The top three strands will be barbed wire and the bottom strand smooth. Posts are set 20 feet apart, with wire stays between every post. Wood posts are to be placed every fifth post.

Braces

To be placed every quarter-mile, at cross fences, the bottoms of draws, and other locations as specified by the EE. A deadman will be placed at all corner and gate braces. The deadman will be tied to the base of a vertical brace post and extend 3 feet into the ground on an angle with the brace cross-wire. The minimum dimensions of the deadman will be 1 foot by 4 feet. Metal or treated wood can be used as a deadman.

Brace should be constructed of 7 foot by 6 inch diameter uprights, with a 6 foot by 4 inch diameter cross-post, securely nailed to the uprights at each end with at least three 40d spikes. The uprights should be notched to hold the cross-post. Cross-posts can be wood or metal.

To construct brace wires, twist two 15-½ gauge wires together. Place 15-½ gauge wire in a loop with ends securely spliced and wires stapled to the post on three sides. Use a fence stretcher to stretch wire before twisting. Twist resulting wires to form a taut tie.

Stretch Gates

24-foot stretch gates will be placed every half-mile and wherever fences meet, or as specified by the EE. Four stays must be used in each gate. Where permanent electric fence is in use, insulated wire should be buried below the stretch gate to carry the charge onward to the next fence section. Do not skimp on this wire or how it is buried. Good electricity is essential to fence success.

General Requirements

All staples holding wire, except in the braces, will be loose enough to allow play in the wire during changes in temperature.

Line posts and cross brace posts will be 6-½ feet by 4 inch diameter. Brace uprights will be 7 feet by 6 inch diameter. All wood posts must be fully pressure treated lodgepole pine, ponderosa pine, or douglas fir. Steel posts must be 5-½ foot "T" posts, C.F. & I. Silver Tip or equal.

Staples will be not less than 9-gauge bright, and two inches long.

Earthen fill around wood posts must be tamped and compacted unless the post is driven directly into the ground.

(3) Gates and Braces

There are as many ways to construct gates and braces as there are fencing contractors. Work out an acceptable procedure for your situation. Keep in mind that contractors tend to skimp on brace construction, so good construction specifications are absolutely necessary, or your fence will not last.

When building gates, remember two things:

- there is no such thing as too many gates, and
- never try to push livestock uphill to a gate, especially a gate that is not equipped with some kind of a trap or funnel.

(4) Electric Interior Fence

Both portable and permanent electric fencing are fantastic livestock management tools. They do have drawbacks that can be surmounted with experience and patience. However, they are unsurpassed in providing portability and flexibility in the management program. Temporary electric fence makes good temporary interior fence and can be used to micro-manage grazing utilization. Electric fence is also useful for moving animals (more on this under "Moving Livestock").

The number one rule for electric fence is high voltage. If a fence delivers 7000 volts, it will be respected. The GROUND must be good to deliver this kind of shock, so all efforts must be concentrated on creating a good ground. Believe it or not, the instructions that come with the fence charger should be followed to the letter. It is a very prudent investment to purchase the largest, portable, solar charger available and install ground rods as instructed. This will save hours and even days of headaches and stress.

Livestock **must** be trained to respect electric fences previous to being introduced to electric fence as the sole means of livestock control, particularly on the mine. Typically, training consists of no more than placing the cattle in a small pasture for a day or two, and then fencing across it with electric fence. The animals will test the fence and then learn to avoid it of their own accord, in a stress-free, familiar environment.

Animals can be trained to move into electrically fenced areas by being called and caked. If they are accustomed to other moving techniques that are quite and stress free, these methods may be employed. The key is to have the animals move into a new pasture without pressuring the fence. Moving techniques are discussed in greater detail under "Moving Livestock." A few days of “caking and calling” works for almost anyone, and will ensure obedient and docile animals on the minesite.

Never use electric fence as a management tool in situations where the animals are likely to be running away from something or otherwise stressed.

If sufficiently frightened, livestock will go through an electric fence, causing poor reinforcement training and considerable trouble for the grazier.

Electric fencing is simplified by good equipment and a four-wheeler. High-tensile permanent electric fence can be installed where fence movement is not expected. Portable electric fence can be installed where fence movement is desirable. The secret to electric fence in either case is a GOOD GROUND. Most electric fence failures are attributable to poor grounding.

Patience is a valuable asset in using portable electric fence, as the wire can be easily tangled. A four-wheeler can be a real timesaver when installing and removing electric fence. Use top quality equipment, especially posts. Economy posts will deteriorate rapidly in strong sunlight, causing inconvenience for the grazier. Use a large lunch cooler to hold the battery out in the field or use solar chargers, which are very reliable if properly used and maintained. A one-piece cooler rather than a cooler with a separate lid is the best type for battery storage.

Be sure to buy a good fence tester (this is worth saying again, “Buy a good tester and ALWAYS keep it with you!”), and be sure to take the time to give the fence a good ground. Once the stock are conditioned, very little is needed in the way of electric fence -- usually one wire alone will be sufficient.

After the grazing season is over, take the time to maintain and repair the equipment. Store the equipment in a dark, dry place to ensure maximum equipment life, and don't forget to take that battery out of the cooler or disconnect the battery in the solar charger.

When installing electric fence to subdivide permanent perimeter fences, give thought to how the livestock will be moved. With portable electric fence, three lines are needed to maintain two paddocks -- one for the livestock to be in and one to move them into. Following initial set-up, the back wire can be leap-frogged ahead to form the next pasture. It is usually best to run the electric fence around the water tank to give full access to the tank. In this way, the water will need to be moved only every other pasture. More detail on this is presented in the subsection "Water Sources for Livestock.”

Portable electric fence and pronghorn antelope are a real problem. Because antelope are so skittish, they will panic and run through an electric fence. There are no perfect solutions (and many people have tried to find one!!) for this except to allow the pronghorn to acclimate to the fence, to keep fence lengths reasonably short and out of pronghorn travel paths if possible, and to plan to check and repair the fence frequently. Another alternative is to go with one-wire high-tensile fence of a more permanent character. This fence is resistant to break-through and the antelope go under it without problem.

In the long run, as the grazing program evolves and becomes stable, it is likely that the use of portable electric fence can be minimized, although

permanent electric fence can be a very cost effective part of the program. Water management can supplement fence management. However, if there is **any possibility** that you will use electric fence as a management tool, take the time to train or re-train your stock before starting them in the mine site pasture rotation. Two days of work prior to initiating the grazing program will save many headaches.

6. Water Sources for Livestock

Section editor: D.G. Steward *Subsection authors: D.G. Steward/R.S. Shinn*

Applicability

Nothing is more important to livestock than water sufficient in both quantity and quality. Lack of this resource can cause more serious problems than deficiencies in other resources, and thus should be a primary focus of effort for both the grazier and the Environmental Engineer (EE). Good water availability makes it possible to maximize grazing management opportunities.

A water system should be as flexible as possible, anticipate future development, and be planned for worst-case water demand. With these considerations in mind, it is possible to develop a very successful grazing program, even if other factors are less than optimal.

Special Considerations

Water is far and away the most important livestock necessity. A stock animal without water for more than four hours is an animal under stress, particularly when temperatures exceed 75 degrees Fahrenheit. Stress leads to undesirable behavior and loss of condition. It is also inhumane. However, water is a good pasture management tool and can aid in good livestock distribution in the pasture. Thus, requiring the animals to move a certain distance for water does not constitute a stress, as long as the distances are small.

Over time, the grazing program will grow. The water system must be designed and over-designed with expansion in mind. Finally, there is no such thing as a fool-proof water system. Contingency plans, storage capacity, and redundant systems are essential for the health and comfort of the animals, the utilization of the pasture, the needs of the grazier, and the peace of mind of the EE.

Techniques

a. Amount of Water Needed

A hot cow will drink upwards of 25 gallons of water a day, and every cow in the herd will want to drink at the same time if water is limited. If water is always in abundant supply, the demand on the tank will be consistent and mobbing will not occur. Let the water run out once or twice, however, and mobbing will become the order of the day. The cattle will rush in when other animals do to ensure their share of the pie. Thus, it is important for water to always be available.

The water system should be designed with extremes in mind – extreme heat and extreme demand. A system designed for average water consumption needs is an inadequate system. The system should also be designed to accommodate herd expansion. In some years it may be desirable to run fewer animals for a long period; in

some years, project goals may call for many animals for a short period of time. Once again, the water system should anticipate the needs of the program.

b. Water Quality

(1) Water Chemistry

Water chemistry should meet the standards of the state governing agency for livestock water. Livestock are averse to water with strong odors, and are averse to petroleum-tainted water. Consideration should thus be given to water source. Typically, the plant well or a water well designed specifically to supply livestock watering needs are the best choices. Stock pond water quality is usually sufficient for livestock, but the water supply is unreliable. As water levels decline, muddy conditions can lead to muddy animals, bogging, and, possibly, coccidiosis, a disease fatal to calves and difficult to treat.

(2) Water Temperature

Stock will not drink water warmer than 90 degrees Fahrenheit. Water consumption is reduced when water temperatures climb above 80. The preferred temperature is between 50 and 75 degrees in both summer and winter. The water delivery system should be designed to keep water temperatures in the preferred range, as livestock gains and health are adversely affected by extremely hot and extremely cold water. Unfortunately, the most flexible water handling system, the reticulated surface waterline, is also the system most subject to temperature extremes, even if white pipe is used. Thus, some design compromise is required.

c. Water Storage and Distribution System

(1) Water Source

Water can come from surface run-off or from groundwater. Surface run-off from intermittent and ephemeral drainages is usually captured behind earthen embankments. However, stock ponds are not a reliable source of water for a minesite grazing program. Ponds will often run dry during the course of the grazing program, or fail to fill adequately during wet periods. In addition to unreliability, the ponds are often heavily utilized by waterfowl, and this use is inconsistent with livestock watering during certain times of the year.

A more reliable source of surface water can be obtained from permanently flowing streams, if these are available on the mine site. Unless access is carefully managed, however, use of permanent streams can conflict with riparian management goals such as erosion and pollution control. Some means to utilize pit pumpage via surface features can be useful, if pit pumpage can be guaranteed.

Groundwater can be made available to livestock directly through springs, access to pits where water has accumulated, or through wells. When pit water is used, care should be exercised to ensure water quality is acceptable. Costs can be reduced if the livestock system can be integrated with a pre-existing mine well system. Otherwise, a dedicated well must be developed.

(2) Water Delivery

Whatever the source, a water delivery system must be included in the water system design. In the case where livestock have direct access to groundwater, running water, or ponds, no additional delivery system may be necessary. However, it is unlikely that a completely passive system will be successful in meeting pasture and reclaimed land management goals. Most likely a reticulated waterline system will be needed to deliver water to reclaimed pastures.

Early in a grazing program, it may be necessary and prudent to deliver water to livestock by means of a truck and tank of some kind. Oil field water trucks, pick-up mounted firefighting tanks, and hydroseeders have all been used as temporary and very mobile water delivery systems. In the long run, a more permanent system will be needed, especially as livestock numbers and program complexity grow. Portable systems can and should continue to serve as back-up systems.

(3) Redundancy

In no other area is redundancy more important than in water delivery. Redundancy can be made available in the form of alternate delivery systems, as mentioned above. It can also be made available in the form of storage capacity. A system with two days of storage capacity is usually sufficiently protected from system failure. However, redundancy will be of no use if a means is not in place for regular checking of livestock water. Although problems in a minesite grazing program are uncommon, water deprivation is the most likely, and poses the greatest safety hazard because the stock will escape the pasture in search of water. As mentioned above, four hours without water on an extremely hot day can cause significant livestock stress and risk of livestock excursions.

(4) Reticulated Water System

A reticulated water system is simply a **network of pipeline** that delivers water to a series of pastures. The network usually originates at a large storage tank, and may be hooked into a redundant system that can allow delivery from another tank. The best type of reticulated system is one where the water can be delivered from the storage tank to all points by **gravity**. A pump-driven system is a system full of headaches and should be scrupulously avoided unless there is no choice.

The NRCS or virtually any hydrologist or pipeline contractor can aid the EE in designing the reticulated water system. The static and dynamic hydraulic head and the extent of the system, as well as the desired delivery rate, must all be considered when designing the system. The EE will do best to be extremely conservative in the selection of the line size and in the selection of the material type. It is unfortunately easy to be misled into installed a system too small to meet demand.

For the systems typically used in a mine situation, 1-1/2 to 2 inch polyethylene line, typically SDR 17 or 11 (or even 9) is a good choice. Smaller line can be used as terminal line, if it is certain that extensions will not later be required. Avoid PVC line as it is easily damaged by settling or vehicles. Avoid the temptation to save money by under-designing the line. If large numbers are expected, a 3-inch mainline with 2-inch feeders would not be out of place. A line that cannot deliver the needed water will hamstring the entire grazing program.

(a) Air and Pressure Relief Valves

Consider that a reticulated system may need air relief and pressure relief valves. Use the most simple and durable valves on the market for these items. Expect the reticulated system to become air-locked occasionally, and develop, in writing, the standard procedures for relieving air lock.

(b) Maintenance

Absolutely critical to the system is a regular schedule of maintenance. Performing preventive maintenance before the livestock arrive on the minesite and winterizing the system annually are essential to program success. Preventive maintenance should include periodic flushing of the entire waterline with chlorinated water. Systems maintenance is an opportunity for lots of headaches for the unwary, the lazy, or the EE with insufficient resources.

(c) Line Burial

Line burial is an absolute must, but, given the uncertainty that accompanies mine operations, shallow burial (approximately four to six inches) may be necessary. Shallow burial is sufficient to protect the line from sun, livestock, and vehicle damage, and to protect the water from temperature extremes, yet sufficiently shallow to allow easy movement of the line. Shallow-bury lines require good winterization techniques and sufficient quality of pipeline to resist winter bursting.

Deep burial should be considered where winter grazing is planned, or where deep burial is absolutely necessary to protect the line from mechanical damage and temperature extremes. Deep burial is not recommended at early stages on reclaimed areas because of the settling that is typical of those areas. Repairing a line buried six feet deep is a real pain.

(d) Valves, Tees, Reducers, and Hydrants

Valves, tees, reducers, shut-off valves, and hydrants are essential parts of the reticulated water system. Check valves should be installed between the well and the storage tanks, and between the storage tanks and the delivery line, particularly if two storage tanks are being used. Delivery valves should be placed on tees off the main system, with reducers placed in the tee such that the actual delivery valve will accept a garden hose (if cattle numbers are less than 150) that will connect to the tank float. Reducers should not be

used if cattle numbers are large, but rather quick-connect systems that will not impede flow from the delivery line into the tank.

The system should be liberally equipped with delivery valves. Valves represent a relatively small increase in pipeline price, and dramatically increase the utility of the system. As many valves as possible should thus be installed in the system.

When the system is deep buried, hydrants can take the place of valves. Hydrants should be individually equipped with shut-off valves, so one broken hydrant doesn't drain the entire system.

Hydrants and delivery valves are of far greater utility on a reticulated water system than permanent tanks. Permanent tanks restrict the way in which pastures can be utilized, and frequently lead to over-utilization around the tank and under-utilization at margins of the pasture.

For shallow-bury systems, shut-off valves should be installed wherever the systems branches. In this way, the entire system need not be completely primed with water for the entire period of utilization. This reduces wear on the system and the possibility of algae build-up. It also provides a means to isolate pipeline breaks and aids in the systematic elimination of air lock. Deep-bury systems should also be equipped with shut-off valves, although it is usually not practical to install a shut-off valve at every reticulation point on a deep-bury system.

(5) Storage Tanks

It is usually unwise to scrimp on selection and installation of a storage tank. Be wary of bargains. A used tank may have a damage and repair history that will later cause problems or leaks. Tanks have been known to slough repair caulking, thus hopelessly plugging the waterline. Old tanks and repaired tanks can leak, a situation difficult to repair when demand on the tank is high. Polyethylene tanks are economical and a good value for summer systems. Steel tanks may be better for winter systems, and steel is certainly the material of choice when tank burial is a consideration.

(a) Tank Placement

Tank placement is an important issue. Spend the time and money to put the tank in the highest possible location. This will be re-paid many times over as the system expands.

(b) Storage Capacity

The storage tank should have at least two days of storage capacity for the maximum number of animals anticipated. The two days of capacity should be for maximum projected intake for each stock animal. For example, for cows, projected maximum intake should be at least 25 gallons per day per animal.

(c) Maintenance

Storage tank maintenance should never be neglected. Small leaks should be repaired before they become big leaks. The tanks should be flushed at least annually with chlorinated water or its equivalent. In areas where wells are contaminated with bacteria, quarterly flushing is recommended. Tanks should be regularly inspected to ensure valves are operating properly and tank integrity is being maintained. Inspection and maintenance forms for the tank, and for the system as a whole, are a good idea.

(6) Stock Tanks

(a) Storage Capacity

The stock tanks themselves should have as much storage capacity as possible yet be as mobile as possible. Water delivery rates will dictate to some extent the size of the tank. It is far more efficient to use as small as stock tanks as possible with as great a delivery as possible. This helps to minimize cattle hanging around the water tank. Typically, 800-gallon circular tanks mounted on tank carriers are a good choice for reclaimed pastures. The 800-gallon tank is small enough to be man-handled when necessary, but large enough to provide the capacity for several hundred animals if water supply is good.

Several tanks can be wagon-trained together, if necessary, to provide sufficient capacity for larger numbers of animals. Tanks need not be drained before being moved, if they are not being moved a great distance. Otherwise, the tank should be drained through the drain hole provided, after the livestock have been moved to the next pasture, and then leapfrogged to the pasture ahead of the cattle. If is essential to have water tanks set-up and full when animals arrive in a new paddock. Setting up water with 200 hundred thirsty cows bellering around you is a harrowing experience and totally unnecessary with good planning.

(b) Tank Carriers

Tank carriers are useful additions to the water management system. These must be constructed, as they are not commercially available. A tank carrier can be made from two axles welded together in a framework that matches the configuration of the tank bottom. The carrier is equipped with a hitch, a ball, and jacks to allow the tank carrier to be transported, to be leveled when necessary, and to take weight off the axles when the tank is in operation. The following figures show a tank carrier that has been used successfully as part of a water management system.

Tank floats are an important consideration. They must be sturdy and resistant to livestock damage. It is not unknown to have an entire water system drained by a curious cow knockomg a float out of the tank. While conventional ball floats work in the system, tanks can also be equipped with a vertical slide float encased in a plastic traffic pylon. The pylon is then

centered in the tank, providing protection for the vertical slide float. The float is hooked to a hose, which leads, in turn, to the water distribution valve.

Experience has shown that the best set-up for a portable tank water valve is to thread a pipe through the drain hole and connect the float directly to that pipe. “Tru-test” valves are very reliable in this application. This method is virtually problem-free, even if light-weight polyethylene tanks are used. The tank can easily be emptied by removal of the plug at the base of the float.

If one side of the tank is not protected from livestock by fencing, it is usually necessary to **sleeve** up to the entire length of a flexible water hose with a piece of PVC or polyethylene pipe. This will ensure that the water supply is not cut-off by an animal standing on the hose. Even when HDPE line is used, it is advisable to sleeve the connection between line and tank to prevent damage to this essential connection.

While a portable tank system may seem to be troublesome, there are significant rewards to be gained from its utilization. The location of tanks can be altered frequently to reduce damage of the grass resource around the tank. Each year the tank can be placed differently to minimize damage. Finally, tanks can be moved from valve to valve to modify utilization patterns within a pasture, thereby greatly reducing the need for interior fencing.

When moving livestock from tank location to tank location within a pasture, it is wise to call and cake the animals to familiarize them with the new water location. Never leave more than one tank location active in a pasture at the same time. This defeats the purpose of the grazing management plan.

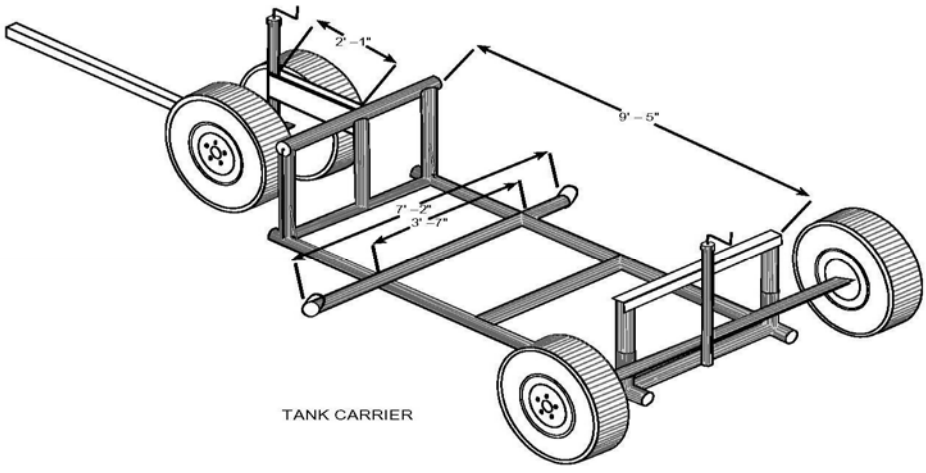

NOTE: USE 2 7/8" P1PE (OUTSIDE DIAMETER) AND AN 8' FIBERGLASS TANK WITH DRAIN PLUG ALL MEASUREMENTS ARE APPROXIMATE

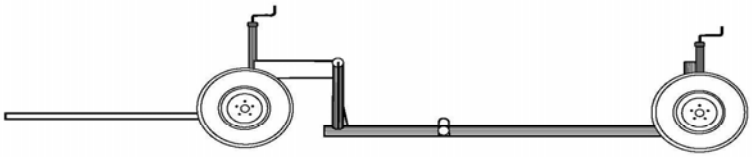

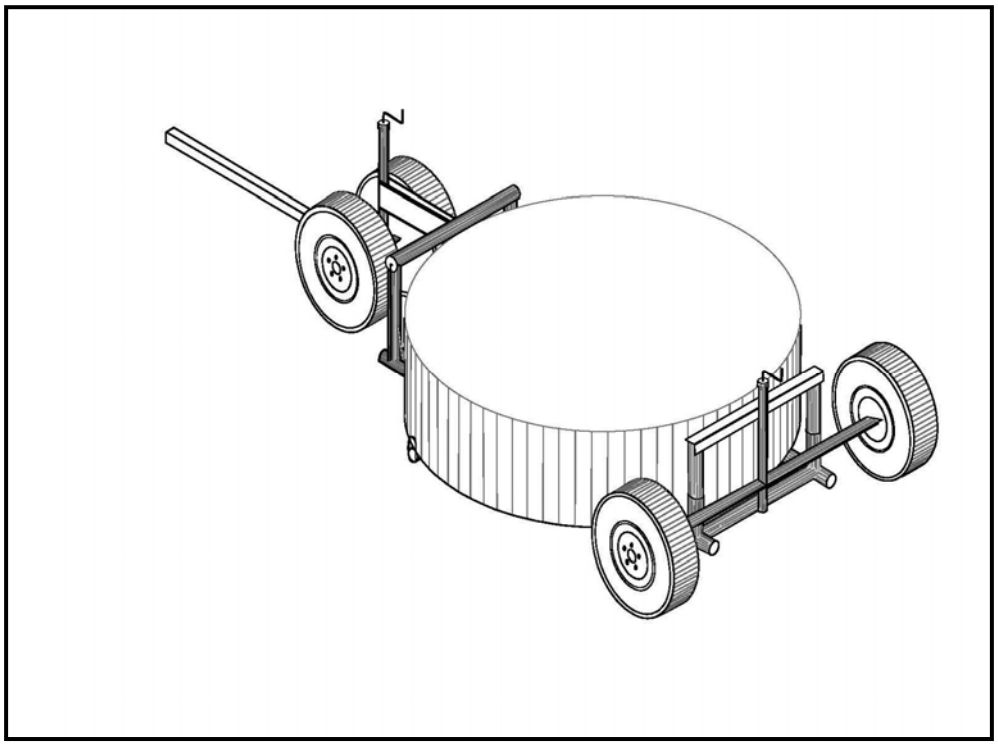

7. Moving Livestock

Section editor: D.G. Steward *Subsection authors: D.G. Steward/R.S. Shinn*

Applicability

Cattle moving can be pleasant and enjoyable for all parties. The cattle generally reap the benefit of new pasture from a move. The Environmental Engineer (EE) reaps the benefit of pasture

management and favorable public relations. However, on a mine site, there is no aspect of livestock handling during which proper stock handling is more essential than during cattle moves, particularly across active work areas.

There are as many ways to move cattle as there are persons conducting the move. Decent stock dogs are a life-saver to the single-handed stockman. This is equally true for a well-trained horse. However, for simplicity and ease of use, **attracting** the livestock into the desired location is a technique readily available to anyone.

Special Considerations

As with any other organism, livestock can be most easily induced to move by attraction rather than repulsion. Attraction, coupled with positive expectations generated by training and stress minimization, will result in straightforward and successful livestock movement on the mine site. Keep in mind that some types of livestock are better tempered and more compliant than others. Buffalo, for example, have not yet been bred for docility, while most types of cattle have. Some types of stock, such as horses, are curious enough that they can be manipulated through their own curiosity. In all cases, patience on the part of the handler will reap benefits. "More haste less speed" is axiomatic in livestock handling.

Techniques

a. Livestock Psychology

Livestock psychology is simple. If the animal is frightened, it will run away, or try to run away. It will also become less predictable. Rarely will an animal become aggressive, especially a cow or calf. If an animal has learned that food or fresh forage will become available as the result of some action on its part, that animal is likely to perform that action. The following discussion centers around the psychology of cows, but the general ideas are applicable to most types of livestock. This method of moving is not intended to replace other established methods of moving for livestock, but to describe a method that is not well-understood and is under-utilized.

Cows do not like sudden motion or movement on the part of others. Even in slow motion, if a cow is approached head-on, it will usually turn away to one side or the other. Cows do not like to be stared at. This will usually cause them to turn away, back up, or stop. If the "personal space" around a cow is invaded by something or someone other than a cow, the cow will move away. If a cow is approached from the rear and from the side, it will move ahead and away. It is difficult to sneak up on a cow exactly from the rear, so the reaction of the cow in this case is difficult to predict.

Cows are very Newtonian in the sense that, once in motion they tend to remain in motion; once at rest they tend to remain at rest. If a herd of cows is moving along in the desired direction, everything possible should be done to maintain the flow. Once stopped, cows will start to think about what is happening to them, usually with the end result that they become uneasy and more difficult to handle. Because of the herd tendency, a cow that is moving along with other cows is usually a content cow. Advantage should always be taken of this fact.

Cows do not like loud **unpredictable** noise. Thus, they will move away from loud unpredictable noise. On the other hand, if they have a favorable association with a certain type of noise, for example, if a person calls or whistles for the cows every time they bring food or a treat, the cows will move toward the noise. This is also true if the noise emanates from a pick-up or a four-wheeler. Cows usually recognize the person or vehicle as well as the sound, and will cue both visually and aurally when responding.

Cows do not easily enter confined spaces unless prior experience tells them no harm is likely to befall them. Thus, it is particularly difficult to force a cow into a strange, confined space. This is important to remember when attempting to load a sick or injured animal out of a pasture and into a stock trailer.

For the most part, cows are docile and usually quite willing to cooperate with what you have in mind. Aggressive pushing, chozing, or chasing stock is always an indication of ignorance on the part of the stock handler. Even cows that have been mishandled for a great part of their lives can be handled quietly with the right techniques, and over time can be re-trained to be very easy to handle.

b. Livestock Training

Once again, the elements of training are simple. Livestock are attracted by food, water, and supplement. Cattle are particularly fond of cow cake, a grain-based energy and protein supplement. Investing in a ton of cake for a season of grazing is a very cheap way to have animals come to you or go where you desire. Given the time savings and the wear and tear on equipment and humans, attracting cows with cake is a very prudent tool for livestock handling.

Similar to the technique of familiarizing cows to electric fence, training cows to come when desired should be conducted in a small, homogeneous pasture. Training calves is a little more difficult, and takes a little longer, but the same principles apply. Start by setting out approximately a pound (about half this for calves) of supplement per animal. If cow cake is used, this can be poured on the ground in a long thin line, meanwhile calling to the herd in a positive, encouraging voice. It is a very unusual cow that will fail to run to cow cake.

Adding voice reinforcement will usually bring cows from far corners of a pasture, even when they cannot actually see cake being offered. If training begins during a period when grass is extremely lush and tall, some difficulty may be experienced in attracting the cows. Even in these situations, however, most cows have sufficient prior familiarity with cow cake that they will come.

After a day or two of simply feeding and calling the cows, begin to use a brightly colored bucket containing a few pieces of cow cake to provide visual reinforcement. Shake the bucket to generate noise. The cows will soon learn to recognize the sound of cake in a bucket. Continue to feed about a pound of cake for each animal. Wait until all members of the herd are close to you before you actually set out the cake. This ensures that all animals will receive at least a little reinforcement training.

Then, for the next two days, enter the pasture, shaking the bucket and calling to attract the cows to you. Cake amounts can be reduced to half or quarter pound levels within four or five days. By this time, the herd should be fully acclimated to you and your attracting routine. At this time, begin moving the cows through a gate or an electric fence to acclimate them to movement. Cows quickly learn that an open gate means fresh forage, and will often push past you through an open gate with no further encouragement.

In general, it is better to bunch cows up a bit at a gate and then open the gate rather then open the gate early. This is because a herd of cows headed for a little treat will act as a unit. Stringing the herd out eliminates this desirable herd effect, and some cows are sure to stop and start thinking about what's happening, bringing the whole moving process to a stop. However, during moves where complete movement of the herd is not necessary, simply open the gate, call the cows, and let them move themselves at their own pace. Cows will always move to an ungrazed pasture from a grazed pasture, usually quite rapidly. Have patience; there is usually no need for a speedy pasture-to-pasture move.

The exception to this relaxed approach to cattle moving is when roads or other livestock barriers must be crossed, or when the livestock move has the possibility of delaying mine operations. In this case, the move should be carefully planned in advance, and plenty of trained helpers should be on hand to avert possible disasters. In addition, as described below, certain simple tools can be employed to facilitate the move. Most important of all, plenty of communication and coordination is needed between operations.

Once the cows respond readily to calling and bucket noise, they are ready to be taken onto the mine site. The training process should take no more than five days for initial training and only two or three for "refresher training". Remember to use cake for reinforcement for the mine site moves -- a few pounds are usually sufficient to keep all animals interested. It is the same theory of positive reinforcement that works so well with humans. If cows are called time after time and not offered a reward, they will slowly (or sometimes quite rapidly) decide there is nothing in it for them, and will not move.

The same process that works for moving cows from pasture to pasture also works well over much longer distances. Over longer distances is it often useful to have one or two people on horseback or on foot at the rear to keep the cattle moving. In front should be a person with the bucket, a truck, or a four wheeler. If the cows are used to being attracted by someone on a four-wheeler, do not make the mistake of trying to push them with the four-wheeler. Most of the cows will be confused. Some will come toward the four-wheeler in expectation of cake. Some will move away from the four-wheeler, but usually not in the direction desired. The four-wheeler is best used as part of the attractant end of the business, not least because it can carry one or two hundred pounds of cake.

As mentioned above, animals do not move well through a gate that is not located in a bit of a trap. At times, cows will decide they do not want to cross paved roads. This is

especially true with young animals. Patience and keeping the herd moving will usually overcome this aversion. Feeding a few pieces of cake to the greedier cows as they move along will help coax the rest of the herd in the desired directions.

Cows will not readily move out onto places that appear strange. Thus, when moving animals across a haul road for example, all elements of the move should be kept as familiar as possible. The same voice, the same bucket, and the same behavior will all contribute to a smooth move.

c. Crossing Haul Roads and Highways

The key ingredient to crossing haul roads, highways, and other active areas is communication. Communicate well in advance with shift supervisors, managers, security personnel, and safety personnel regarding the timing, location, and manner of the move. Often it is most convenient to conduct a cattle move on the minesite during shift change or during lunch breaks. When moving across the highway, it is courteous to notify the highway patrol, especially if the move will occur across a busy highway.

When cattle are not familiar with the area across which they are being moved, an alley comprised of electric twine and pylons can be devised to guide them. This should not be electrified. The cow caller with his bucket or four-wheeler should lead the herd exactly the same as they have been trained. This is not the time to try a new method or to assume that, because calling alone usually works, no cake is needed this time. Haul road moves, which are usually smooth and painless, can be invitations for disaster.

During road moves, security and supervisory personnel can be used to block the road on either side. If trucks are not available, persons with flags are acceptable. Be sure that blocking personnel are at least 100 yards from the cattle. Otherwise, they may disturb the stock, and interrupt the smooth flow of animals.

Often it is best to have a few extra people on hand in case animals begin to stray. One or two people on foot at the rear of the herd will help to keep the herd in motion. At no time is it more important than during a haul road or highway move for workers to employ cow psychology (as discussed above) to the maximum extent. However, it is easily possible to move hundreds of cows across unfamiliar spaces with a caller, two blockers, and two follow-up personnel.

d. Stock Moving Equipment

Whenever possible, it is always best for cows to move themselves. However, if time is limited and distances are great, or if a cow must be transported to the veterinarian or the sick pen, some equipment is needed to effect the move.

(1) Unloading Stock

If stock are brought to the mine site in a large tractor-trailer rig, a portable unloading chute will be necessary. These can be purchased, and sometimes rented, from a local livestock equipment supplier. Be sure the chute is in good working condition, particularly the floor of the chute. Never hurry animals during unloading. The more calm they are upon arrival, the less likely will be a mishap of some kind during or following unloading. Nothing is more undesirable than a broken leg, or a group of wild animals that

immediately breaks through a fence and runs for the neighbors. Of course, if the recommendations given above are followed, neither occurrence is likely.

If the stock are brought to the mine site in a stock trailer, no chute is necessary. However, the task of unloading will be eased if the trailer is backed up to a rise or small hill, so the stock need not jump down from the trailer. If the trailer floor is wet and slippery, running and jumping will likely lead to injury.

Once unloaded, the stock should settle rapidly. If not, some cake will draw their attention away from their new surroundings, and allow time for settling. Be sure that the fences are tight and water is available **before** releasing stock in a pasture. Mineral supplement should also be available. When releasing stock in a pasture with alfalfa, it is best to provide bloat block for five days prior to release.

(2) Loading Stock

If stock are to be loaded onto a large tractor-trailer rig, it is best to trail them to a dedicated load-out facility. Many problems can occur during loading onto such a rig. It is generally true that the truck driver will assist in loading the animals. It is also generally true that the trucker will use yelling, pushing, and a hot-shot (an electrical stimulating device) to assist in his loading efforts. Come to terms with the trucker before you start loading the truck. Be sure to discuss with him how loading will occur and the group size to be loaded. It is

best to bring the truck to the load-out, park it, and turn it off before loading begins. Truck noise can be frightening to the cattle.

A series of small pens and a narrowing alley to the load-out chute will assist in easy loading. If the cattle are calm and familiar with trucks, they will almost load themselves. If the cattle are unfamiliar with loading, loading very small groups (like 2!) at a time will be more time effective in the long run than trying to push bunches up the chute.

A more common problem on the mine site than group loading is the need to load one sick cow or the bulls into a stock trailer. In this case, a portable corral is extremely useful. If arranged so entrance to the trailer is achieved through a funnel or alley, it is likely no load-out chute will be needed. Most tame cows and bulls will jump into the stock trailer if the distance up does not exceed about 18 inches.

Even broken-legged cows have been loaded successfully into a stock trailer in this manner, even without portable corrals. The keys once again are patience, accommodation of cow psychology, and some forethought about the arrangement of the stock trailer. Cow cake can be used to coax a group of animals containing the target animal(s) into the corral, and the unnecessary animals can then be sorted off, leaving the target animal(s) in the corral.

8. Vegetation Quality for Grazing

Section editor: D.G. Steward *Subsection authors: D.G. Steward/R.S. Shinn*

Applicability

Forage is the general term for the food necessary to support livestock. Forage requirements vary greatly for different classes of livestock at different times in their life cycle. It is not the purpose of this subsection to discuss in detail this information, which can be more adequately obtained from other sources. Instead, this subsection relates basic forage requirements to conditions most likely to be found on reclaimed mines sites.

Special Considerations

Cattle need protein, energy, and minerals for a balanced forage. Adequate quality forage is usually available during any period of active vegetation growth. When vegetation is no longer growing, and has become senescent or dormant, forage quality will be insufficient for livestock growth and health. Under these conditions, forage supplements must be available to achieve livestock needs.

Techniques

a. Active Vegetation Growth and Vegetation Variety

(1) Cool Season and Warm Season Grasses

The typical reclaimed landscape is dominated by cool season grasses. These grasses begin to grow early in the year and provide excellent forage until they begin to go dormant, usually in late June on the Northern Great

Plains. At this time, warm season grasses become preferred forage because their period of growth typically extends later in the summer. In addition, certain warm season species such as blue grama (*Bouteloua gracilis*) on the Northern Great Plains will cure with a higher protein rate than cool season grasses.

The Environmental Engineer (EE) who desires a successful postmining land use program should become familiar with the phenology and characteristics of species that will be planted in the postmining landscape.

Successful establishment of palatable warm season grasses is an important aspect of a well-rounded forage program. Without palatable warm season grasses, the period during which livestock can graze on the mine site without supplementation is limited to the active growth period of cool season grasses. Depending on the location, warm season grasses can be difficult to establish, or certain species can be easily established but are not palatable. Prairie sandreed (*Calamovilfa longifolia*) is a good example of an easily established warm season grass that is not particularly palatable, except as a cured forage in the winter.

The prudent EE will work hard at warm season grass establishment, not only for regulatory requirements, but for the adequate establishment of the postmining land use.

(2) Forbs

Forbs are also an important part of the grazing program. Alfalfa (*Medicago sativa*) is an excellent forage and is heavily used by cattle, deer, pronghorn antelope, elk, and many species of birds and mice. It is an introduced species that deserves a place in the reclaimed landscape. Its deep roots and ability to fix nitrogen make it useful for soil development and retention.

(3) Shrubs

Shrubs also play an important part in livestock and wildlife forage. For example, four-wing saltbush (*Atriplex canescens*) is native to the Northern Great Plains, is reasonably easy to establish, has been shown to be persistent under the proper grazing regime, and is excellent forage for livestock and wildlife. For these reasons, it should be a component of the postmining landscape wherever it is native.

The shrub component of the reclaimed vegetation community can be successfully manipulated with grazing practices. The effects of timing of grazing on different vegetation lifeforms is discussed in the subsection entitled "Timing of Grazing".

b. Livestock Supplements

When the reclaimed landscape is not a well-balanced mix of cool season grasses, warm season grasses, forbs, and shrubs, or if winter grazing is practiced, livestock will usually

require protein and energy supplementation in addition to the usual mineral supplementation.

Often perplexing to the novice grazier and the EE is the sight of cattle standing in knee-deep grass but grazing little and losing condition. This often occurs by mid-summer where the vegetation is dominated by wheatgrasses. As the grasses begin to go dormant, it is wise to supply a supplement such as Crystalyx, Nutralix, Loomix, or cow cake. The grazier and EE should jointly decide on who will supply what supplement **before** the grazing season begins. In addition, supplement use should be frugally implemented to ensure that supplement costs do not outpace income from the grazing program.

Using the same logic applied to mineral (presented in the discussion about the grazing contract), the mine may decide to supply supplement to accommodate any possible forage deficiencies. In addition, supplements provide an excellent opportunity for managing vegetation and accelerating succession. Cattle that would not be otherwise interested in old, dry grass can be induced to forage with the use of a sweet supplement such as Crystalyx. This can greatly aid the EE in eliminating excess biomass from a pasture.

Winter grazing on reclaimed ground almost always requires protein supplementation. However, as mentioned above, careful study of nutrient requirements is necessary for maximum economy. Dry cows before their third trimester, for example, require surprisingly little in the way of protein.

9. Timing of Grazing

Section editor: D.G. Steward *Subsection authors: D.G. Steward/R.S. Shinn*

Applicability

Roots, litter, adequate grazing pressure, ADEQUATE RESIDUAL, and proper timing of livestock movement will lead to pasture enhancement and successful postmining land use. Proper grazing, including the integration of native pastures where possible, will also enhance vegetation cover, production, and diversity, those features of the postmining landscape necessary for bond release.

Special Considerations

Nothing is more important to proper pasture management, diverse and productive vegetation, and successful postmining land use than the proper timing of grazing. It is also, by far, the most controversial subject in range and pasture management, and can have far reaching influences.

As with the subsection "Vegetation Quality for Grazing", it is not the purpose of this subsection to present and comment upon the many philosophies of timing of grazing. The interested reader is referred to standard range management texts, to the various holistic range management programs, and to the periodical entitled "Stockman Grass Farmer", published out of Jackson, Mississippi. Presented here are only those activities and observations that have proven useful on the Northern Great Plains.

Techniques

a. Important Aspects of Grass Growth

There are a few basics of grass growth, the understanding of which are necessary to good grass management. While grass growth is ultimately controlled by the genetics of the grass, grass growth occurs in response to sunlight, proper temperature, and adequate moisture. If sufficient water is available to the grass and it is not too cold, grass of some kind will continue to grow. While grasses spend a certain period of the growth phase storing energy in their roots, they also can grow by drawing on that energy reserve, although sufficient water must be available to mobilize this resource.

Good pasture management thus includes good root management, because roots are the storehouse for the grass. Grasses do not grow from the tip, as do trees and shrubs, but from elongation of the grass stem from a point called the internode. Close grazing will eliminate the internode, requiring the grass to establish another stem. This requires more resources than does continued elongation of an existing stem, and may weaken the plant if it occurs excessively.

Grazing removes senescent material and stimulates growth. This, in turn, creates a desirable, "tender" plant for the cow to graze. However, uncontrolled grazing will lead to repeated grazing of individual plants, much to their detriment. In addition, excess removal of biomass reduces the biomass available to form litter, a protective coat of dead plant material that enhances the capture of water by reducing raindrop impact and runoff. The timing and type of grazing must thus be controlled to preserve the health of the individual plants and the overall pasture. Learning to gauge the amount of residual to leave in a pasture is essential to long-term grazing success.

Without grazing, there is no impetus for the grass to produce multiple stems. This lack of stimulation inhibits stem proliferation. At the end of the growing season, a grass will become dormant, and the growth that was produced during that growing season will become senescent. Failure to remove this senescent growth reduces the ability of the grass to produce new growth the following season. This results from a type of "self-competition", where shading and simple occupation of space by dead grass reduces the capacity for new growth.

The twin results of undergrazing are usually a bunchy, stemmy grass of little interest to livestock. In fact, these so-called "wolfy" plants are a real management problem on reclaimed lands, as they fail to provide the ground cover necessary for good nutrient and hydrologic cycling.

The task of the grazier is to optimize these aspects of grass phenology in order to produce a diverse, productive pasture that stays green for as long as possible. As discussed in the subsection entitled "Vegetation Quality for Grazing", green grass is the most forage.

Equally important as the surface appearance of the plants is the growth and development of the root reserve. A pasture with well-established root reserves will withstand drought and adverse conditions such as grasshoppers far better than a

pasture with poor root reserves. A pasture with good root reserves will stay greener much longer than a pasture with poor root reserves. A pasture with optimum litter cover (enough to capture the rain, but not so much to choke grass growth) will also stay greener longer, because more water will have been captured in the soil, and the protective litter will retard evaporation from the soil.

Adequate litter and standing residual, extensive roots, and timely biomass removal are the real keys to green grass. Litter, roots, and biomass removal are also the keys to vegetation cover and production, two requirements for bond release on reclaimed grounds.

b. Overgrazing -- The Challenge of Livestock Distribution

(1) Grazing During Vegetation Dormancy

Overgrazing means removal of biomass in such a way and in such an amount that the vigor, and possibly the life, of the plant is imperiled. While sufficient physical damage can occur during dormancy to jeopardize the life of the plant, this usually requires grazing and hoof damage far in excess of what will kill a plant during its active growth phase. Thus, dormant plants can usually be grazed far more heavily than can actively growing plants. The danger of winter grazing comes in the removal of so much biomass that litter cover is critically reduced, leading to water runoff, a condition to be avoided at all costs.

Heavy winter grazing can increase productivity and diversity during the growing season, probably by the removal of standing dead biomass, the mechanical breakdown of litter, and surface manipulation of the soils. These beneficial effects are lost, however, if grazing of the area continues into the growing season with no opportunity for the pasture to recover.

(2) Grazing in the Active Vegetation Growth Phase

Pastures in their active growth phase can be approached in two fashions, each of which is beneficial under different circumstances. If the size of the pasture cannot be closely controlled and the grass is growing rapidly, a moderate stocking rate and continuous grazing for approximately half of the period of active growth will result in optimum stimulation of the pasture. This type of grazing helps to maximize forage production and extend the period of green grass because the high availability of forage causes the cows to "top" the grass, without damaging or eliminating the internode.

"Topping" is essential to the maintenance of well-established pastures that are already in good condition. This type of grazing also enhances root development, because the plants are not being stressed to the extent that reserves cannot be stored in the roots.

In opposition to light, continuous, grazing during the period of active grass growth, intense, time-controlled grazing may be employed. If the size of the pastures can be closely controlled, livestock will quickly consume all available

forage, and can then be removed with time remaining for the grass to re-grow. This type of grazing can cause grass plants to spread rapidly. There is a danger that the root system can be weakened by this type of grazing, but this can easily be avoided by providing sufficient growing time, not only for top growth, but for root growth and energy storage. A simple rule of thumb for actively growing pastures is to avoid re-grazing until grasses have re-grown three leaves.

Intense, time-controlled grazing is also an especially useful way to remove weeds during their usually limited period of palatability. This type of intense grazing pressure early in the spring on pastures infested with cheatgrass, for example, will remove a lot of cheatgrass biomass (which is actually excellent forage in its early stages) and still leave plenty of time for the perennial grasses to come on strong. However, the grazier must watch the pasture closely to prevent damage, especially in the critical period as grass growth slows. This is the period when grass is most vulnerable to damage because it has no means (that is to say, water) to recuperate its losses. This leaves a plant to go into the next growing season in a weakened state.

Both topping and intensive grazing are useful and effective. The real problem with grazing is that there are never enough cows when the grass is really growing, and always too many cows when the grass has stopped growing but is not yet senescent. As mentioned above, from the standpoint of the grass, it is hard to have too many cows when the grass is dormant. Too many cows on **dormant** pasture is far more likely to harm the cows than it is the grass, unless the ground is grazed to barren-ness. For this reason, even the most heedless grazier is unlikely to kill grass in the winter time. Conversely, cattle will continue to thrive long after damage has begun to occur to the vegetation during the growing season.

c. When to Move the Cows

With all these tricky judgment calls to be made, how does the grazier, and especially the EE who has the job of supervising the grazier, know when it is time to move the cows? From a practical standpoint, and assuming that all supplements and water have been properly located, the time to move the cows is when the proper level of residual has been reached As a general rule, in a paddock situation where stock are reasonably evenly matched with paddock size, the first day the cattle will be confronted with excess forage, the second day with adequate forage. The third day will be somewhat forage deficient, but will need to continue to grazing to optimize forage availability.

Reaching the optimum residual forage point is difficult for the novice grazier or the EE to identify in the beginning. Thus, other, somewhat easier signs can be used. One of these is to move the livestock just before trails start to appear in the paddock. From an even more practical standpoint, the time to move the cattle is just as trails **start** to appear. The cattle themselves may become restless and anticipatory as the time to move approaches.

The grazier must have a sharp eye for seeing incipient trail development, or anticipating it from experience, and be well enough ahead of the game to be ready for the move. It is not unusual for distinct trails to develop in a pasture during the time it takes the grazier to set up the next water location and electric fence. Fortunately, grass usually grows back, but damage can occur rapidly.

Another sign that it is time to move is when most of the pasture appears to have been grazed to some extent by the herd. Cows tend to graze concentrically around their favorite features -- water tanks and supplement barrels. If these are properly distributed, and the pasture is the proper size and shape, cattle will also range out over the pasture grabbing a bite from all over. This predilection for concentric grazing is a strong argument for portable, or at least readily movable, tanks. Movable tanks ensure that the center of the grazing circle is not in the same location year after year.

Another practical moving clue is to move livestock from a pasture after it rains a sufficient amount to induce growth. This gives the grazed pasture an opportunity to use the moisture for re-growth. It also keeps the cattle from really churning up a small pasture, although this is not always a detriment. Lots of pockets and hoof marks mean lots of places to capture water, and this is especially important in a pasture that has neither good litter nor good vegetation cover. So, three clues: trails, grazed stems, and rain. Experience, of course, is the best guide to pasture movement, but even experience is rooted in these three clues. At times, the cattle themselves will tell you when it is time to move. Particularly in small, closely-controlled pasture situations, the herd will be at the gate anticipating your arrival after two days in the pasture.

d. Integrating Native and Reclaimed Grazing

Whenever native ground can be integrated in space or time with reclaimed pastures, this should be done. This allows for native seeds and stems to be brought onto the reclaimed surface, which in turn increases vegetation diversity, one of the criteria needed for bond release. The fragment of native pasture to be included need not be large, and if physical inclusion is not possible, grazing a native pasture within two days of grazing a reclaimed pasture will result in seed carryover in the livestock excrement.

e. Reducing Cool Season Grass "Super-competition"

Cool season grasses have proven to be both the success story and the problem on many reclaimed lands. Their rapid establishment and growth helps to quickly meet cover and production goals and to begin the processes of soil development and water retention. On the other hand, the rapid establishment and growth will outcompete the more fragile forbs and shrubs, and will actually choke out desirable species such as sagebrush (*Artemisia tridentata*), a species that is difficult enough to get going as it is.

The twin remedies for cool season grass super-competition are reducing the seeding rate of the cool season grasses, and grazing them as early as the end of the first growing season. A light grazing will not damage or destroy the grass, but may keep the grasses in check while the warm season grasses, the forbs, and the shrubs get going.

f. Encouraging Shrub Growth

The degree to which shrubs are a natural part of the grasslands ecosystem is a hotly contested topic in certain circles. Certainly, if shrubs occur in significant numbers in an area, then there are certain aspects of the environment supporting shrub growth. Grazing can be used to enhance those aspects of the environment. However, grazing should not be used to create a grazing disclimax through the elimination of all other plants. This is akin to maintaining a desirable body weight through bulimia. It is neither healthy nor desirable.

As discussed above, manipulation of cool season grasses will encourage shrub growth. On the other hand, if shrubs are not desirable, grass growth can be encouraged to outcompete the shrubs. However, as discussed in the subsection "Vegetation Quality for Grazing", the greater the diversity of **palatable** forage, the more desirable for the livestock. In addition, the shrub lifeform helps to trap snow in winter for increase in soil moisture, and provides shelter for young animals, both livestock and wildlife.

The trick with grazing is to keep the shrub niche open, and this generally means managing the amount of grass. With plenty of grass, cows will seldom graze shrubs anything but lightly during the growing season, so shrubs do not need to be protected from grazing. If anything, lack of grazing on reclaimed lands will lead to the demise of a promising shrub population.

g. Coordinating the Grazing Program with the Vegetation Sampling Program

During the seasons that vegetation sampling in an area is anticipated, it can be useful to coordinate the grazing program and the sampling program in such a way as to minimize the necessity for range cages. Range cage placement is expensive and time-consuming, and can be avoided if sampling activities are conducted in advance of the grazing program. This may not be possible in all pastures, but even partially avoiding the use of cages can save time and money.

When convenient, collecting a little information both before and after a pasture is grazed can greatly increase knowledge about the degree of pasture utilization, the palatability of the various species, and the cover remaining following grazing. Quantitative information can greatly facilitate grazing decisions. Thus, when vegetation sampling is being conducted for other reasons, the EE can obtain additional knowledge at a small incremental cost.

10. Grazing, Wildlife, and Wildlife Habitat

Section editor: D.G. Steward *Subsection authors: D.G. Steward/R.S. Shinn*

Applicability

The relationship between grazing, wildlife, and wildlife habitat can be very controversial. Fortunately, on the Northern Great Plains, practices that are good for livestock and pastures are also good for wildlife and vegetation communities. These practices include: optimizing vegetation cover, production, and diversity; encouraging soil development; maximizing infiltration; and minimizing run-off.

Special Considerations

Livestock pastures can be constructed to benefit wildlife, particularly by restricting the use of nesting areas during the reproductive season and maintaining adequate residual following grazing. Fences can be constructed to minimize detrimental effects on wildlife for little or no additional cost. Because a trained and tranquil cow that has plenty of forage is also a cow very unlikely to cross a fence, the most minimal of fences, which are also those least likely to harm wildlife, are effective for livestock control.

Not only are wildlife a natural resource in the postmining landscape, they are also of potential economic benefit to the end user. The benefits can include tourism and hunting, and may be of substantial economic benefit to the landowner. Thus, postmining land use should include wildlife for economic as well as aesthetic and moral reasons.

Techniques

a. Livestock as a Management Tool for Wildlife and Wildlife Habitat

One of the primary benefits of livestock grazing is that it can be used as a precise and cost effective tool for the manipulation of vegetation. Grazing pressure can be used to direct vegetation community development and mediate competitive effects between various plant species. There is no other tool more flexible and cost effective than grazing. Thus, even if a postmining landscape dedicated to fish and wildlife habitat is anticipated, grazing, especially during the bonding period, can help to manipulate the vegetation in the desired direction.

There is no doubt that the grazing tool can wreak havoc in the hands of an unskillful or uncaring user. On the other hand, grazing can accomplish, at a profit, what would cost thousands of dollars in man-hours, equipment hours, and consumption of fuel and chemicals. Controlled grazing is as useful to the development of the postmining landscape as is seed, a seed drill, or a disk.

b. The Effects of Grazing on Vegetation

(1) Stimulating Growth in Young Vegetation

A common misinterpretation of the effects of grazing is that young vegetation will always be destroyed by grazing. In fact, light grazing of young vegetation can stimulate growth, a fact that is commonly employed to enhance the growth of winter wheat. The point is that, under certain circumstances, grazing can be a very useful tool; under other circumstances it can be very destructive. To borrow a phrase, grazing doesn't kill vegetation, people (and their bad management) kill vegetation. It is inefficient to forbid the use of a valuable tool simply because the tool can be misused. It is better to ensure training and adequate control on the use of the tool.

(2) Encouraging Shrub Communities

Another common misinterpretation is that shrub communities can be encouraged only by employing destructive overgrazing or by no grazing at all. This belief results from observation of widespread grazing mismanagement. However, in Campbell County, Wyoming, for example, controlled grazing has

been used to good effect to encourage shrub growth by reducing competition and manipulating the timing of grazing.

Sagebrush growth can be encouraged by reducing cool season grass competition as soon as possible after planting of the reclaimed surface. Heavy grazing while the grasses are dormant is one way to achieve this goal; another is to graze new vegetation lightly towards the end of the first growing season.

On the other hand, if the goal is to encourage the growth of species such as snowberry (*Symphoricarpos occidentalis*) or wild rose (*Rosa woodsii*), winter grazing and fall grazing should be minimized -- just the opposite. Like any other skill, the benefits of grazing management can only be realized if the grazier is experienced, knowledgeable, and trained. Fortunately, vegetation will always respond positively to good management, and mistakes, even serious ones, can be rectified with time.

(3) Improvement of Riparian Vegetation

One final note: Grazing is generally considered destructive to riparian vegetation. Once again, it is the timing and manner of grazing that destroys this type of vegetation. Properly controlled grazing can improve riparian vegetation, encourage the growth of trees and shrubs, and increase stream baseflow. Just as a hammer can be used to build a house or tear a house down, grazing can be used to stimulate or destroy vegetation.

c. Conclusion

Despite many strong arguments in favor of joint land uses, there is a significant contingent of people who believe grazing should be eliminated or minimized in the postmining environment. This view typically devolves from observation of the problems that are caused by improper and poorly planned grazing practices.

Overgrazing, or landscape destruction as a result of poor grazing practices, often occurs when the land user has no vision of the landscape, no understanding of the consequences of the different aspects of grazing, or is unable to integrate good grazing practices into his particular financial environment. On the other hand, some people have adopted the viewpoint that grazing has no place in the landscape under any circumstances, even if the lack of grazing is detrimental.

Lack of knowledge is the basis for **both** overgrazing **and** the belief that all grazing is bad. Thus, ongoing training, testing, education, and demonstration are necessary adjuncts to the development and continuation of grazing in the postmining landscape. Grazing, wildlife management, landscape management, and reclamation are all areas of endeavor that are not yet true sciences, but semi-qualitative engineering practices. To continue to progress in these areas and to continue to develop the beneficial aspects of grazing and habitat development, training, testing, education, and demonstration must be part of any postmining land use program.

Reclamation specialists today have unparalleled opportunities to experiment, to create, and to foster the advance of science and technology. These opportunities can and should be conducted in an economic framework that results in overall financial benefit to the company supporting these endeavors. Thus, the prudent and thoughtful engineer will carefully plan and review all programs related to grazing, wildlife, and postmining land use to ensure they are maximally beneficial, not only to the landscape, but also to the company and to the overall science and engineering of reclamation.

C. WILDLIFE

1. Forage Enhancement for Wildlife

Section editors: D.G. Steward *Subsection author: Bonnie C. Postovit*

Applicability

Forage availability and quality are important factors governing the number and variety of wildlife that use an area. In most reclamation efforts, the primary goal should be to provide a wide range of forage species which will attract and maintain a diverse wildlife community. In addition, it is often possible to focus some effort on providing forage for one, or a group of, target wildlife species.

Special Considerations

Reclamation can provide diverse forage, which will, in turn, promote a diverse wildlife community. Food habit studies can be used to guide reclamation efforts to enhance an area for one or many target species.

Techniques

a. Forage Diversity

Diversity of forage depends not only upon diversity of vegetation species, but also on diversity of **lifeforms**. The forage and habitat provided by a mix of lifeforms--grass, forb, shrub, tree--will attract a wide variety of wildlife.

(1) Non-native Species

While reclamation regulations may mandate the use of vegetation species that were present prior to mining, the potential for habitat enhancement through judicious use of adapted, non-invasive, “non-native” species should not be overlooked. For example, alfalfa is a seasonally favored forage of some big game and upland game bird species, and Russian olive trees provide forage (and nesting habitat) for a variety of songbirds.

Thoughtful incorporation of such plant species as revegetation elements can serve to increase the forage variety. On the other hand, no one would suggest seeding *Kochia*; although it provides a high-quality food source for numerous wildlife species, as it is considered an undesirable weed. Still, *Kochia* and many of the weedy species that initially invade young reclaimed areas provide a valuable cover and forage bridge until seeded species establish and mature.

b. Target Wildlife Species

Target wildlife species may be selected as the primary focus of revegetation efforts. Target wildlife species should occur in the area, or have the potential to occur, if provided with the proper forage (or other habitat elements). While it is technically possible to stock an area with a non-occurring species, there may be elements of habitat other than forage (e.g. weather extremes; water availability; nesting, loafing, or denning cover) that are beyond the capability of reclamation to provide.

(1) Food Habits

When a target species (or suite of species) has been selected, food habits should be researched to determine what type of forage should be established. For common or well-studied species, food habits information may be available in publications from State or Federal wildlife agencies. Food habits studies for other species can be obtained from wildlife research journals, available through university libraries or wildlife departments. Because wildlife species' food habits may vary regionally, it is wise to base plant selection decisions on research nearest the locale in question.

(2) Seasonal Variations in Food Habits

Food habits for wildlife species often vary seasonally. To maximize habitat enhancement, reclamation efforts could emphasize the forage element that is most limited in the area of consideration. However, seasonal forage selection must be functional and practical. For example, it would make no sense to plant winter forage for a species whose winter range would not include the area.

2. Water Resources

Section editors: D.G. Steward *Subsection author: Bonnie C. Postovit*

Applicability

Premining water sources such as creek channels, playas, springs, and stock ponds are vital to both aquatic and terrestrial wildlife. This is especially true in the arid West.

Special Considerations

Creating water sources on reclaimed lands greatly increases the abundance and diversity of wildlife that will occupy an area. Impounding or diverting water must be conducted according to applicable regulations regarding water rights.

Techniques

a. Design

Availability and attractiveness to wildlife need to be considered when designing water features for the postmining landscape.

(1) Availability

Availability includes both physical accessibility and temporal availability. Sources such as stocktanks should be designed to allow use by wildlife. A tank can be partially sunk in the ground, or a ramp constructed to the rim of the tank, to allow game birds and other small animals to drink. Escape ramps should be constructed in tanks, to allow animals to crawl out should they fall in. Ramps can be made of concrete block, rocks, metal, or wood, and should be securely attached.

While some water features (playas, small seeps) are intended to be temporary, some perennial water sources (deep ponds, groundwater-supplied reservoirs) should also be incorporated into reclamation plans where possible. Perennial water greatly enhances the value of an area to wildlife.

(2) Attractiveness

Attractiveness of a water source to wildlife can be enhanced by providing adequate cover. Dense vegetation, shrubs, trees, or rockpiles can be used to provide cover around the water source, and along escape routes. Where possible, pond perimeters and other features should be fenced to prevent livestock from degrading water quality and shoreline vegetation. Livestock can be limited to a small access area, or better yet, provided with a separate watering facility (e.g. a trough fed by a gravity-flow pipe).

b. Type of Water Source

Several types of water sources can be created, depending upon the site involved, and type of use targeted. These sources include: reservoirs, channel pools, playas, wells, and rainfall catchments.

(1) Reservoirs

Reservoirs serve a wide variety of wildlife as permanent or semi-permanent water sources. The size of a reservoir is, of course, dependent upon its drainage area and the amount of water available. Both large and small reservoirs are useful to wildlife. Some species are only attracted to larger bodies of water. However, a single large reservoir often will not provide as much habitat value as several smaller ones, which help distribute wildlife use over a greater area. A combination of large and small reservoirs provides the most potential for wildlife diversity. See the subsection "Providing Interim Wildlife Habitat" in the Wildlife section for reservoir design modifications that enhance wildlife value.

(2) Channel Pools

Channel pools in a reclaimed drainage can serve as reservoirs for aquatic life during dry seasons. Pools should be designed to hold water long after active runoff has ceased. Under natural conditions, alluvial discharge often maintains such pools; this characteristic may not be a feasible component of reclaimed channels. A persistent pool could still be created by excavating basins in the channel bottom, and lining them with impermeable material.

However, channel pools may fill with sediment if the volume of runoff is not sufficient to provide periodic scouring flows.

(3) Playas

Playas are shallow, undrained basins that provide a seasonal water source for wildlife. Constructing a playa depends upon creating an area of non-draining topography. State and Federal regulatory agencies should be consulted to determine if this will require a variance from standard mine regulations. The size of the playa will be determined primarily by the precipitation available and the acreage of the non-draining topography. To allow water to persist, clay-type soils should be used in the center of the basin where water is expected to accumulate.

(4) Wells

Wells developed to supply livestock water can easily be modified to provide an attractive wildlife water source. Any associated water tanks should be modified for safe use by wildlife (see part a(1) above). In addition, overflow water can be piped to a fenced area to create the effect of a seep or spring, exclusively for wildlife use.

(5) Rainfall Catchments

Rainfall catchments, sometimes called "guzzlers", are self-filling sources of drinking water for wildlife. They have been used very successfully to enhance wildlife habitat in desert areas. Catchments involve constructing an apron of impermeable material (concrete, asphalt, metal roofing, etc.), sloped to conduct all precipitation into a basin in the center or at one end. Generally, the basin is a buried steel tank or concrete basin. Whatever is used, safe wildlife access to the water is imperative. Catchments constructed of sturdy material require a minimum of maintenance.

To reduce evaporation, the catchment area is often covered and semi-enclosed, with the opening facing away from the prevailing wind and in a northerly direction where possible. Considerable volume of water can be provided by a relatively small collecting area: roughly 900 gallons can be accumulated by a 15 by 15 foot apron in a 6-inch precipitation zone.

3. Rockpile Design and Construction

Section editors: D.G. Steward *Subsection author: Bonnie C. Postovit*

Applicability

Rock outcrops and other rock features are important elements of wildlife habitat that are removed during mining.

Special Considerations

When material is available, rockpiles can be used as a wildlife habitat enhancement feature on reclaimed land. Rockpiles are used by a wide variety of fauna and for a number of functions. Design and placement can enhance rockpile functions. Examples of varied rockpile design and placement are shown in the following figures.

Techniques

a. Material

Material is important in constructing a usable rockpile. Medium (chair-sized) to large (sofa-sized or greater) rocks work best in constructing rockpiles. When such rocks are placed together, there will be good-sized openings under and between them. Rubble piles, like natural talus areas, can be valuable for small mammals, but they are of limited use to larger animals. Large rocks are also better, because they are not likely to be covered during topsoiling, or completely obscured by vegetation growth. Concealed rocks present a real hazard to reclamation machinery or postmining agricultural operations.

b. Design

Proper design of rock structures can enhance their value for specific functions such as denning, shading or sunning, perching, and nesting. A rockpile can be designed to fulfill more than one function. In constructing any type of rockpile, it is important to overlap and pile rocks together to create stable, protected spaces under and between rocks. Rocks merely lined up in a row, or fitted tightly together like a stone wall, do not provide the niches necessary to shelter animals. Rockpiles should be a **minimum** of two rocks wide and three or more deep. Rockpile length can vary, with intended function and material availability, from 10 to 50 or more feet.

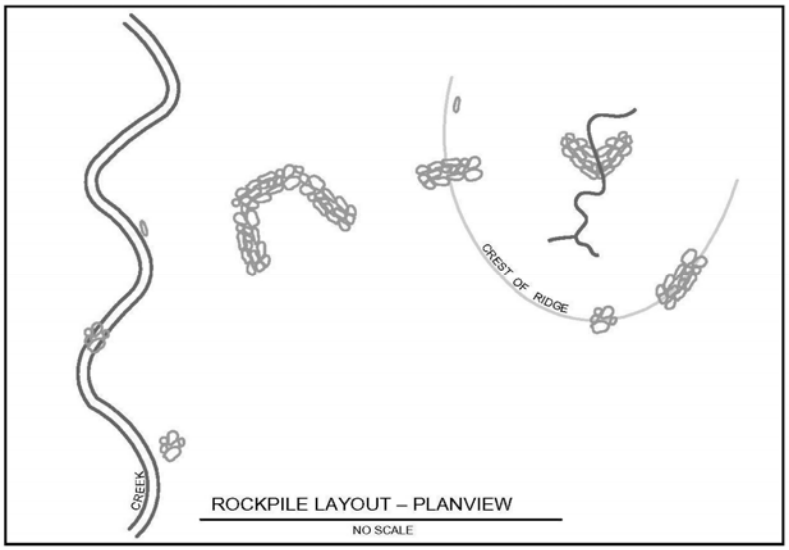

(1) Denning Sites

Denning sites can be created for rabbits, foxes, coyotes, and other mammals. Medium to large rocks should be placed securely against each other at angles, so that hidden cavities are formed at the base of the pile.

Constructing the pile prior to topsoiling allows the base of the pile to be covered with dirt, further concealing and protecting den spaces. A rockpile on a slope can be "notched" into the hillside, as shown in the accompanying figure. Rockpiles intended as denning sites for fox-sized animals should be at least 10 to 15 feet in diameter.

(2) Shading and Sunning Areas

Rockpiles constructed as shading areas are particularly useful to wildlife in treeless areas. Deer, especially, are attracted to such features during hot summer months. Sunning sites are attractive in cooler seasons, for rocks store and radiate heat from the sun. The same rockpile can serve for both shading and sunning if it is built long, on an east-west (or southeast-northwest) axis. This creates shading sites on the north/northeast side, and protected sunning areas on the south/southwest side. A long rockpile set perpendicular to prevailing winds will also be used as a wind shelter.

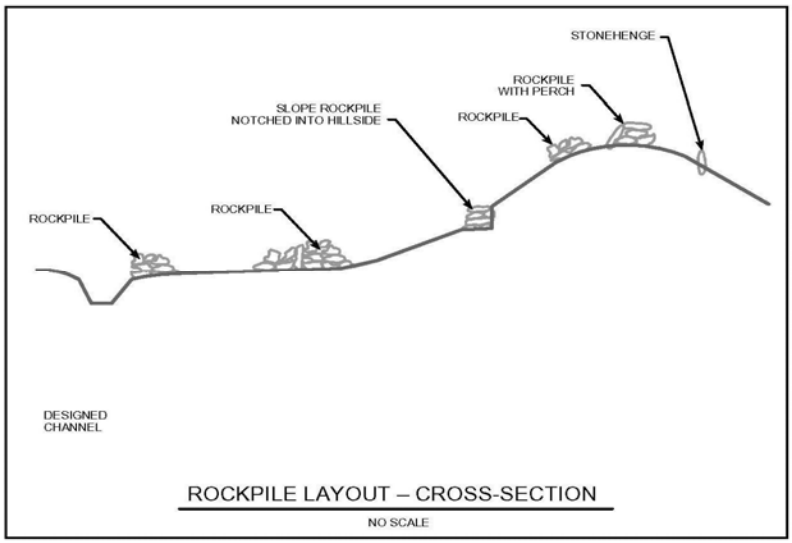

Avoid the appearance of a flat, featureless wall. The length of the pile should be curved or zig-zagged: horseshoe, "V", and "W" shapes, for example. The bends create varied niches and microclimates along the length of the pile. If large, flat rocks are available, they can be tilted at an angle, or placed as overhangs to augment the shady side.

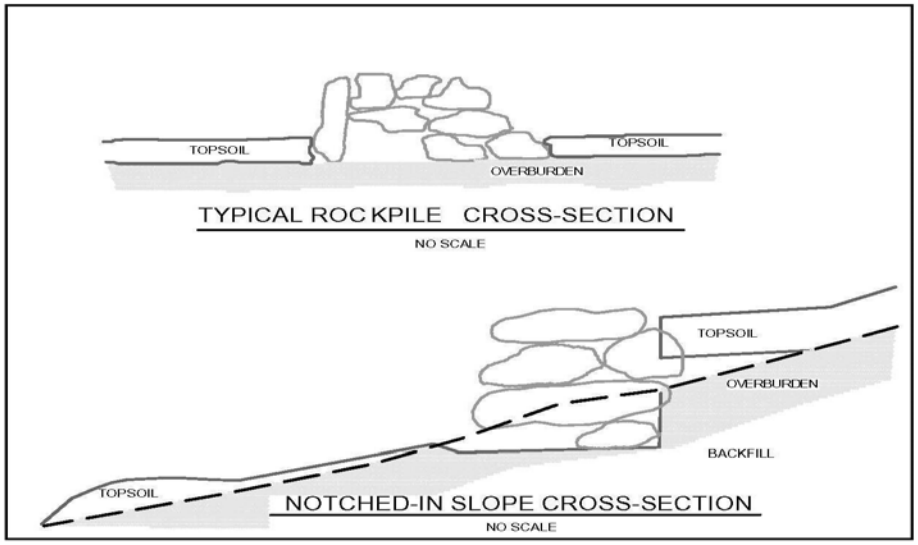

(3) Perching Sites

Rockpiles provide perching sites for a wide range of birds, from songbirds to raptors. Many songbirds staking out breeding territories sing from an elevated perch. Rockpiles are welcomed, especially if trees, shrubs, and fenceposts are scarce. In level topography, almost any medium to large rock will be used. A long rock, set erect ("Stonehenge style"), can be attractive to perching birds of all types. Such rocks should be at least as high as a fencepost (four to five feet).

(4) Nesting Sites

Rockpiles can mimic the outcrops used as nesting sites by ferruginous hawks and some other raptors. For this function, a rockpile needs to have a level spot, big enough to hold a nest, a few feet (or more) above the ground. Smooth rocks (like sandstone) do not serve this purpose as well as rough ones (like scoria). Material can slide or blow off of smooth surfaces.

c. Placement

Placement of rockpiles affects both aesthetics and function. Varied placement and size of rockpiles is illustrated in figures above. A number of factors should be considered to maximize the value of rockpiles.

(1) Naturalize Appearance

While a "Stonehenge-style" rock or two can serve a particular purpose, judicious placement of rocks is necessary to avoid numerous features with extremely unnatural appearance. Artificial rock features can actually help

naturalize the appearance of reclaimed areas if placed at the peaks of hills and rims of draws, where outcrops frequently occur in nature.

(2) Improve Habitat Diversity

Rockpiles are also an important tool to increase the habitat complexity of areas that possess little topographic diversity. Rockpiles on flat areas provide escape cover, perches, and shelter that would otherwise be minimal. Rockpiles placed at pond and creek channel margins improve cover for wildlife that access the water source. Aquatic habitat can be enhanced by placing a rockpile where water will partially (or completely) cover it.

(3) Enhance Biological Function

Topographic placement can enhance their function. A shading site on the north- or east-facing bank of a draw or gully is a good example.

Placement of rockpiles intended for nesting raptors can increase their attractiveness. Visibility of approaching dangers is greatest on elevated sites, and in the middle of open areas.

Placement of sunning sites should take into account likely patterns of snow drift. A sunning rockpile located just below the leeward brow of a ridge is likely to drift in with snow and be less usable during winter.

(4) Stabilize Erosive Areas

Rockpiles placed at the windward edge of a ridge or at the peak of a hill can serve to reduce wind erosion. A linear rockpile at an abrupt downward break in slope can help protect the edge from excessive erosion, as well as provide the aesthetic appearance of rimrock. Even when intended as erosion stabilization features, rocks should be clustered and overlapped to increase wildlife habitat utility, rather than strung out individually.

d. Construction Considerations

(1) Equipment Types

Construction of most rock features can usually be handled by bulldozers. Some require placement of individual rocks, requiring a loader or large track backhoe. Such equipment is usually needed to selectively place the upper rocks on taller structures, and the large flat rocks for ledges or overhangs.

(2) Minimizing Dirt

If a large amount of dirt is dozed into the rock pile, the utility of the feature can be severely reduced. While it is impossible to build a rockpile free of dirt, there are two ways to minimize dirt content. Utilizing larger rocks on a compacted surface reduces the amount of dirt a dozer will push with the rock. It may also be helpful to collect all the necessary rock material first, then build the rock feature next to the material pile. This allows the operator to focus on just moving the rocks.

D. REFERENCES

Wyoming Department of Environmental Quality, Land Quality Division (WDEQ-LQD). 1991. Guideline Number 14 - Recommended Procedures for Developing a Monitoring Program on Permanently Reclaimed Areas. WDEQ-LQD, Cheyenne, Wyoming. 9 p.

E. CITATIONS

95th Congress, Public Law 95-87. Surface Mining Control and Reclamation Act of 1977. August 3, 1987.