IX. WATER LEVELS IN WELLS AND WATER-LEVEL (POTENTIOMETRIC-SURFACE) MAPS

Pertinent 30CFR[1] Sections:

Description of hydrology and geology.
Ground-water information.
Cross sections, maps, and plans.
Hydrologic balance.

The definition of an aquifer system(s) and the direction of ground-water flow within these aquifers in the permit area and the vicinity involves the compilation and interpretation of water-level data. The most important indicators of ground water and of ground-water flow are water-level measurements in wells and the locations of springs. During well inventory (chapter VII) and during the test-drilling program (chapter XVI), water levels are measured and compiled together with veil depths and names of aquifers penetrated. Some exploratory wells and water-supply wells obtain water from more than one aquifer; water levels in these wells represent a composite potentiometric head of all aquifers penetrated and should not be included in the potentiometric map representing a single aquifer.

Water levels in wells may be determined with several measuring devices: weighted and chalked steel tape, electric cable, air line, sonic, and pressure transducers. The first three methods, described below, are the most common and are illustrated in figure IX-1.

Tape. — The tape is lowered into the well until the lower part intersects water. The wetted length of the tape is subtracted from the "held" length of the tape to determine the depth to water.

Electric cable. — This method consists of two parallel wires, insulated from each other, which close a circuit when they touch the water. This contact causes an anmeter needle to deflect. The insulated line is marked at 5-foot intervals, so that the depth to water can be determined with a carpenter's tape.

Air line. — This method is generally used only in wells on which pumps are installed. This method involves the installation of a small-diameter air line from the top of the well to about 10 ft below the lowest anticipated position of the water during the pumping test. Air is pumped into the air-line; and the pressure reading is subtracted from the air-line length to determine the depth to water.

A record of a water level measurement includes:

(1) The date and time of measurement.
(2) The intersection of the weighted steel tape with the water level in the well.
(3) The reading at the "held" part of the tape at the measuring point (MP) at a selected compass direction, such as, at an access hole, at the top of casing for an open hole, or at a hole in the pump base; for example, hole in pump base north side.
(4) The depth to water below the MP.
(5) The distance of the MP above or below the land surface elevation (LSE).
(6) Any other observations that might indicate the water level may be non static, such as the influence of a nearby well pumping, reported recent pumping of the observation well, or the sound of water cascading into the well, as from a fracture.

[1]CFR = Code of Federal Regulations

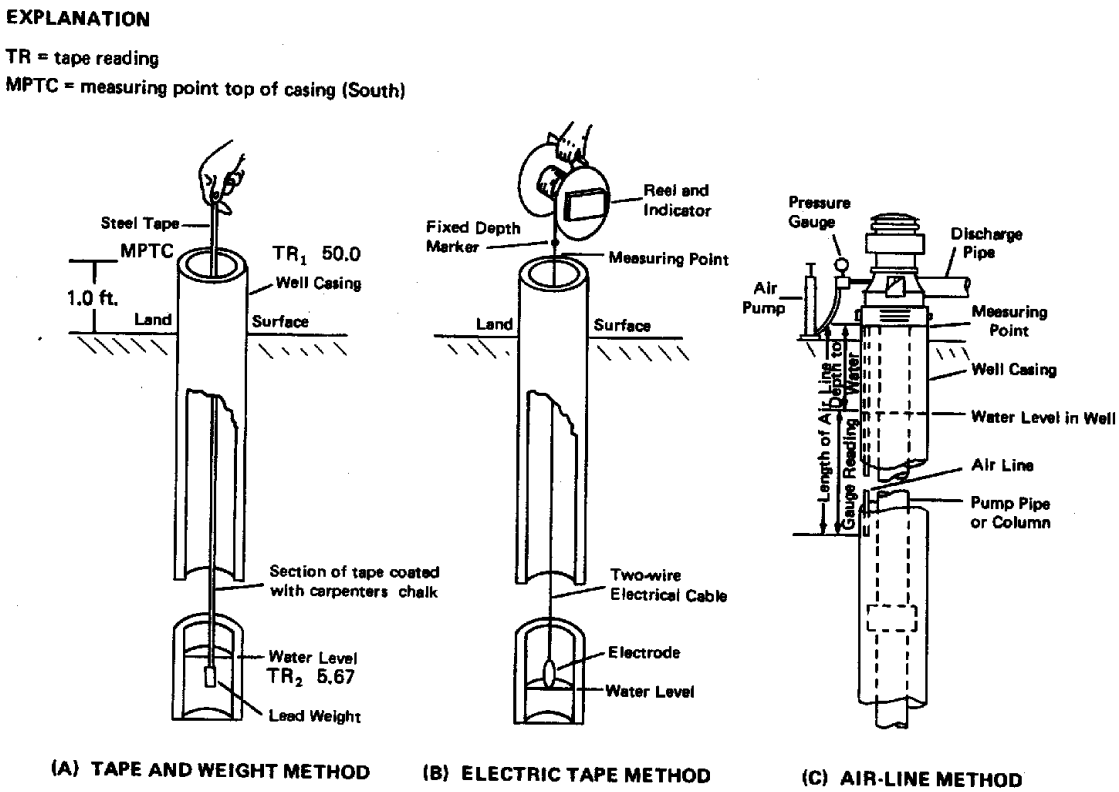

(a) Tape & Weight Method - Graduated steel tape lowered to belcw water level; wetted tape (TR2) subtracted from held tape at top of casing	(b) Electric Tape Method - Graduated electrical cable lowered until electrode contacts water surface; depth to water recorded at measuring point.	(c) Air-Line Method - Air pressure pumped into air line; pressure gage shows the height of water above end of air line, which is converted depth to water level.

Figure XI-1.— Three types of water-level measurement devices. (Modified from Heath, 1983, p. 72)

The water-level record shown in figure IX-2 indicates that on July 15, 1982, at 8:30 in the morning, I.M.User held the 50.0-ft mark at the top of the casing (south side), and chalked part of the tape was wetted to the 5.67-ft mark. The depth to water below the measuring point is 50.0 ft - 5.67 ft = 44.33 ft. Since the MP is 1.0 ft above land surface, the depth to water below the land surface is 44.33 ft - 1.0 ft = 43.33 ft. The LSE can be estimated from a 7½-minute topographic map or could be determined from surveying. For this well, the LSE is 3,456 ft. Therefore, the water level in this aquifer at well 3 was 3,413 ft on July 15, 1982. The other water-level measurements and remarks indicate the effects of nearby pumping.

If the waller level does not fluctuate with time, the well is probably plugged. A sinple test can be done to determine whether the well is responsive to the variations in hydrostatic head of the aquifer. A slug of good-quality water could be; poured into the casing to raise the water level. Should the water level decline within several hours, the well is probably not plugged. If the water level does not decline, the well is plugged and should not be measured further, unless steps are taken to open it.

WATER LEVEL MEASUREMENTS (fields)

COAL STRIP-MINE PERMIT APPLICATION

Measured by

Location of Project A-B-C South Forty Mine
Description of Measuring Point (MP). Top of Casing (South) 1.0 ft. above LS
Land Surface Elevation (LSE) - 3456 ft. (USGS 7½' Baden Quad.)

DATE	HOUR	WELL	TAPE READING AT MEAS PT	TAPE READING AT WAT LEV	DEPTH TO WATER MP BELOW	DEPTH TO WATER LS BELOW	REMARKS
1982			TR_1	TR_2			
7-15	0830	No. 3	50.0	5.67	44.33	43.33	irrigation well
							¼ mi. N. pumping
8-13	1630	No. 3	50.0	10.15	39.85	38.85	rain, no pumping
9-10	1415	No. 3	60.0	none	dry	dry	irrigation wells
							to North and South
							pumping
10-21	0915	No. 3	40.0	1.31	38.69	37.69	no pumping
11-30	1110	No.3	40.0	4.55	35.45	34.45	no pumping

Figure IX-2.— Typical water-level measurement form.
(In part from U.S. Department of Interior, 1981a, fig, 7-3)

A series of successive water levels plotted against time on a graph is called a hydrograph. The examples in figure IX-3 illustrate the natural fluctuation of ground-water levels in an observation well in eastern Kentucky. The monthly hydrograph for the 1974 water year illustrates the seasonal variation in depth to water and the direct response of the aquifer to precipitation. The 5-year hydrograph (1970-74) reflects natural water-level fluctuations. Most offices of the U.S. Geological Survey, State Geological Surveys, State Department of Natural Resources, or State Engineer's Offices, maintain recording observation-well programs.

Water levels fluctuate naturally in response to recharge to the aquifer, from streams and precipitation, and to discharge from the aquifer to streams, springs, wells, and evapotranspiration. The depth to water is dependent on many factors such as typographic position of the well, season, and hydraulic properties of the aquifer. Water levels are generally low in late summer or early fall because of the high evapotranspiration and the lack of recharge. Water levels are generally high in the spring because of recharge from snowmelt water and rain before the plants leaf out. Installation of strip-chart recorders on the well head enables continuous monitoring of water levels.

The directions of ground-water flow in a permit area are determined from a potentiometric map, which is a contour map depicting lines of equal ground-water elevations. This is done by compiling concurrent water-level measurements that have beer converted to potentiometric "heads" or elevations above a common datum and plotting them on a well-location planimetric map and drawing contours to connect the points of equal water levels. The flow moves downgradient at right angles to these contours. The water levels used for these maps are measured within a short period of time, generally a week; thus the potentiometric map is representative of the ground-water flow conditions for that particular time only. An example of a water-level compilation from which a potentiometric map could be drawn is presented in table IX-1 which gives the well number, the land-surface elevation, the aquifer designation, the premining water-level measurement and date, and the calculated potentiometric heads. A potenticmetric map drawn fran these data is illustrated in figure TX-4.

Water level changes through time may be presented in three ways — data tabulation, hydrograph, and water-level-change map. The sample data compilation table in IX-1 includes the measured depth to water below land surface at a Montana mine on June 4th, 1975, and the calculated water-level change from the premining water-level conditions. The 4-year hydrographs in figure IX-5 show the water-level declines due to dewatering in the same area. Figure TX-6 is a water-level-change map of two aquifers in the same area showing declines that resulted iron surface mining during a 3-year period.

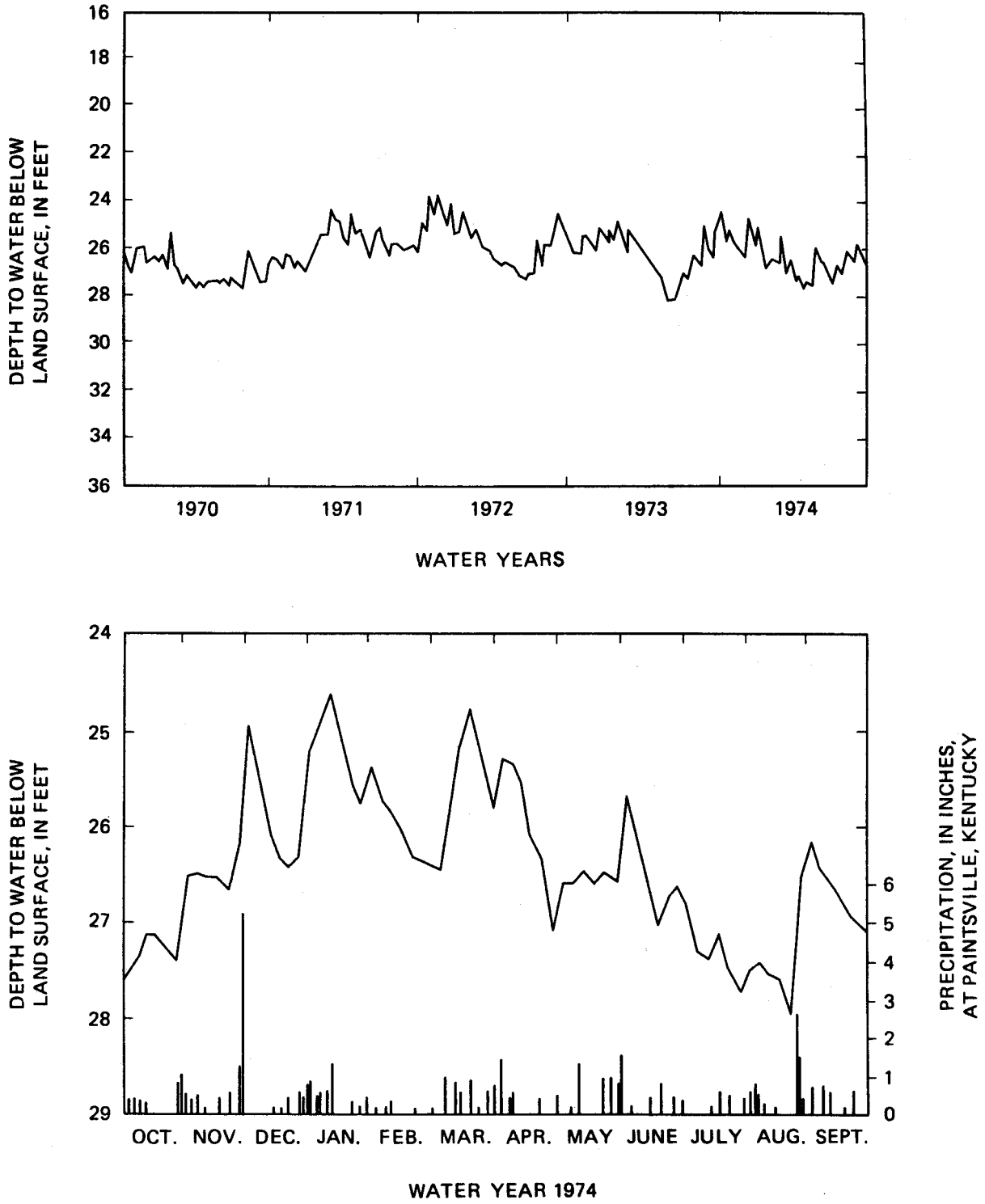

Figure IX-3.— Example of 5-year (long-term) hydrograph (above) and monthly hydrograph (below) for an observation well in eastern Kentucky, (From Kiesler and others, 1983, p. 57)

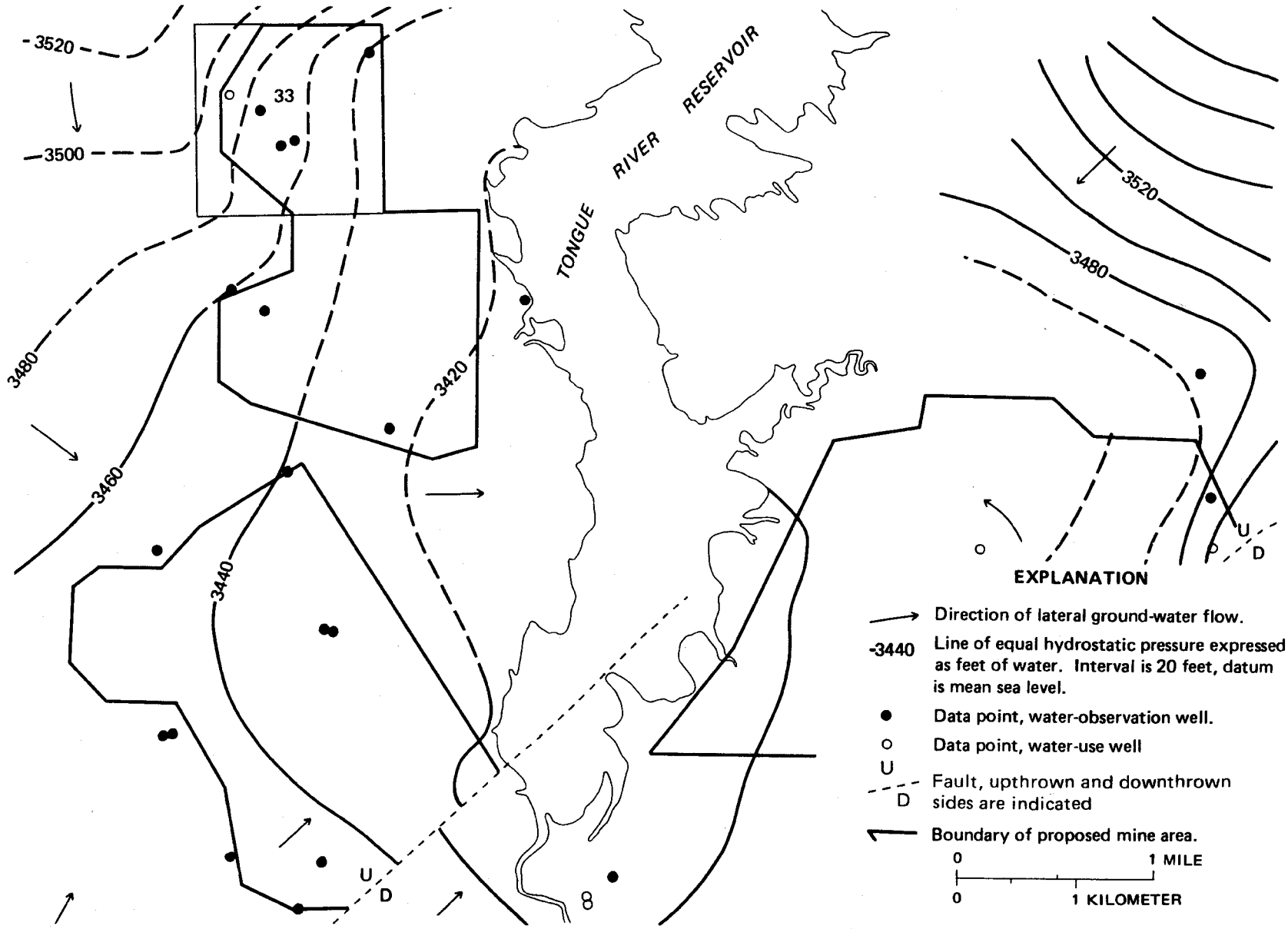

Figure IX-4.— Example of potentiometric map of D-1 coal aquifer in the Decker, Montana area, before mining, based on data such as in table IX-1. (From VanVoast and Hedges, 1975, pl. 4)

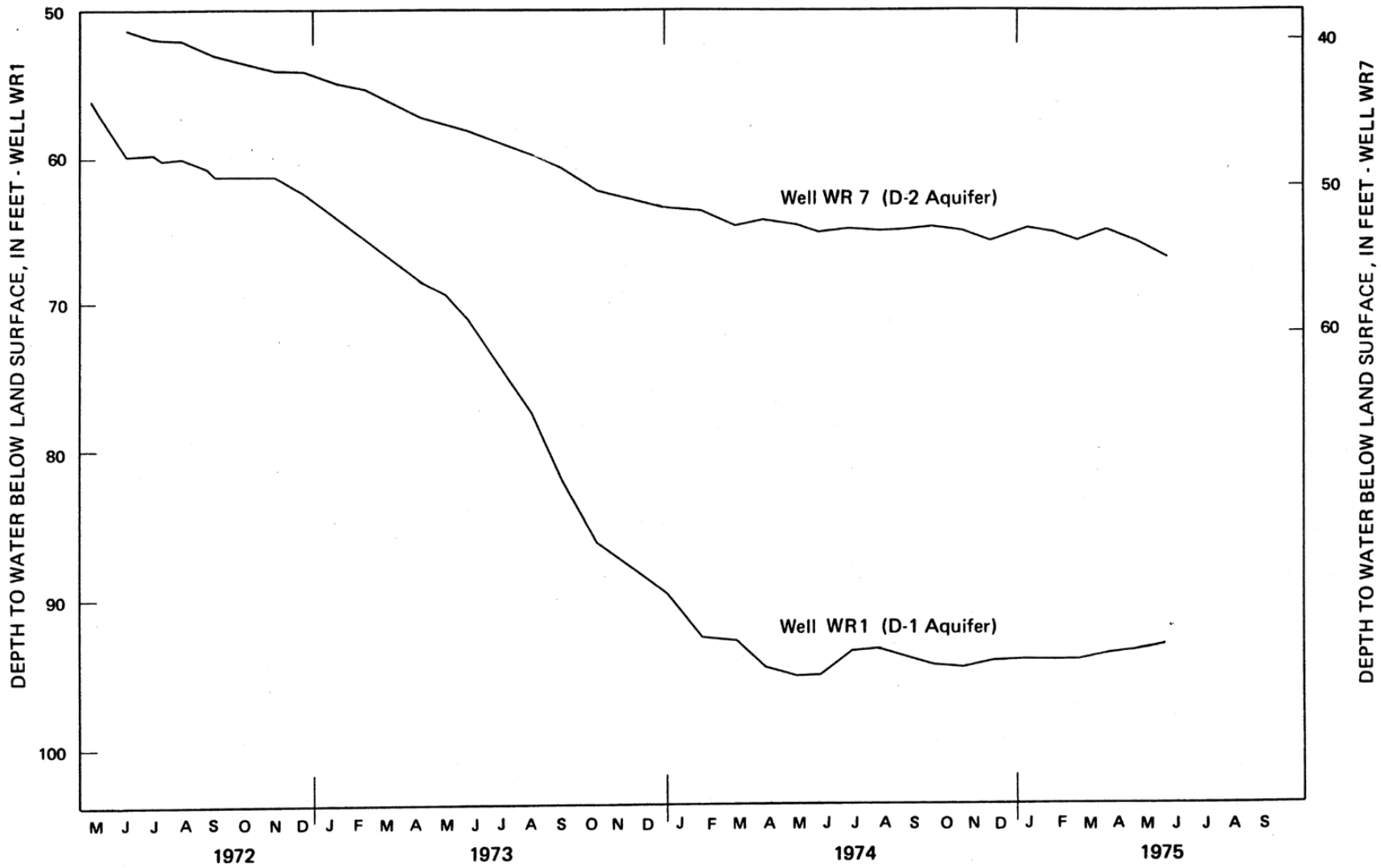

Figure IX-5.— Four-year hydrographs of observation wells near Decker, Montana, (Mine area is shown in figs. IX-4 and DC-6.) (Mining started in spring of 1972.) (Modified from VanVoast and Hedges, 1975, pl. 10)

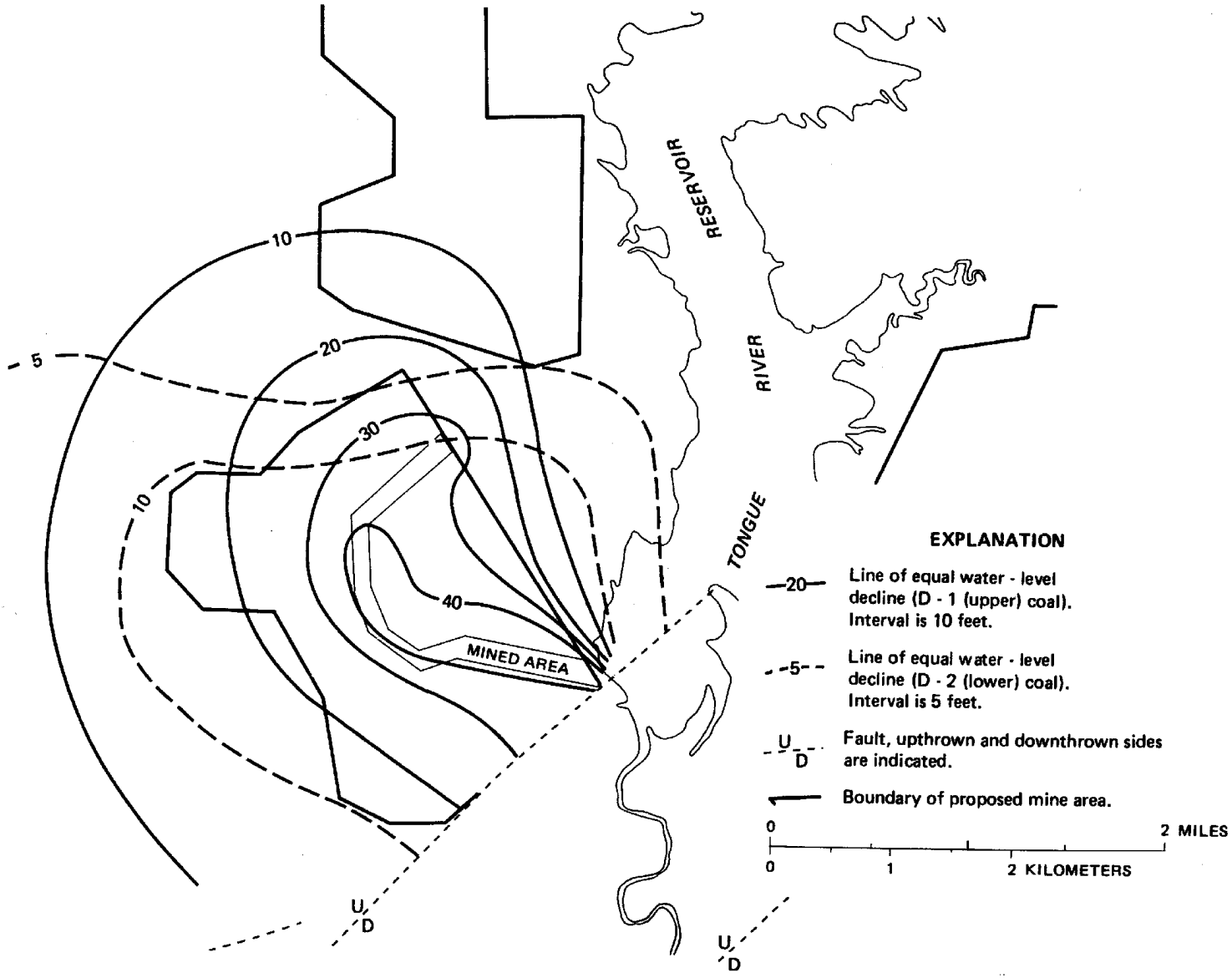

Figure IX-6.— Example of water-level change map in two aquifers near Decker, Montana after 3 years of surface mining.
(Modified from VanVoast and Hedges, 1975, pl. 9)

Table IX-1– Example of water-level data compilation for observation wells.
(From Van Voast & Hedges, 1975, table 5.)
[ft,feet]

Well number	Land surface elevation	Aquifer	Initial measurement: depth to water (ft below land surface)	Initial measurement: Date	Premining potentiometric surface elevation (ft above sea level)	June 4, 1975 depth to water (ft below land surface)	Water level decline (ft)
WR 1	3,498	D-1 Coal	56.12	8/10/70	3,442	93.12	-37.00
WR 3	3,612	D-1 Coal	159.23	11/24/70	3,453	180.57	-21.34
WR 4	3,585	D-1 Coal	134.51	3/30/71	3,450	156.87	-22.36
WR 6	3,499	D-1 Coal	55.97	6/12/71	3,443	92.57	-36.60
WR 7	3,498	D-2 Coal	39.24	6/21/72	3,459	54.58	-15.34
WR 8	3,537	D-1 Coal	90.41	9/30/72	3,447	111.29	-20.88
WR 9	3,537	D-2 Coal	67.64	9/30/72	3,469	80.48	-12.84
WR 10	3,537	D-1 Coal	92.46	9/26/72	3,445	111.95	-19.49
WR 11	3,575	D-1 Coal	128.25	9/26/72	3,447	146.94	-18.69
WR 12	3,586	D-1 Coal	138.99	9/26/72	3,447	158.77	-19.78
WR 13	3,592	D-2 Coal	152.20	9/26/72	3,440	156.50	- 4.30
WR 14	3,598	D-1 Coal	157.60	9/26/72	3,440	179.40	-21.80
WR 15	3,685	D-1 & 2 Coal	236.39	6/04/74	3,449	239.01	- 2.62
WR 16	3,640	D-1 & 2 Coal	184.00	6/04/74	3,456	188.20	- 4.20
WR 17	3,570	D-1 & 2 Coal	112.86	6/04/74	3,457	114.98	- 2.12